CALIFORNIA REGIONAL WATER QUALITY CONTROL BOARD,
LOS ANGELES REGION

Pasadena, California
August 31, 2000
433rd Board Meeting

ITEM: 12

SUBJECT: City of Malibu, Wastewater Disposal Issues

DISCUSSION: Staff will update the Board on the (attached) report entitled: City of Malibu, Wastewater Disposal Issues

CITY OF MALIBU
WASTEWATER DISPOSAL ISSUES

BOARD BRIEFING: Draft dated August 17, 2000

California Regional Water Quality Control Board

Table of Contents

	Page
Purpose	1
Background	1
Water Resources	1
Regulatory History	2
Regional Board Delegation to Local Agencies	2
County Regulatory Efforts	3
City of Malibu Regulatory Strategy	3
Recent Regional Board Strategy	4
Current Regional Board Strategy	4
Package Plants	5
Septic Systems	7
Permitting Commercial Septic Systems – Malibu Valley	8
Conclusion	9
Technical Investigation – Malibu Valley	
Attachment 1: Malibu City Limit Map	
Attachment 2: Malibu Valley Area	
Attachment 3: Trancas Canyon Area	
Attachment 4: Tivoli Cove	
Attachment 5: Point Dume Area	
Attachment 6: Winter Canyon Area	
Attachment 7: Summary of Package Plants in the Malibu Area	
Attachment 8: Tentative WDRs - Malibu Bay Company	
Attachment 9: Tentative WDRs – Malibu Bay Club	
Attachment 10: Selected Regional and State Board actions form the 1970s	
Attachment 11: Regional Board Resolution No. 98-023	
Attachment 12: Regional Board letter, dated March 9, 1999, regarding the proposed Malibu Village and Malibu Country Park	
Attachment 13: Recent press clippings from the *Los Angeles Times*	

Regional Board Report on Wastewater Disposal Issues and Malibu Technical Investigation In the City of Malibu

Purpose

Staff has prepared the following information at the request of Board Member Susan Cloke. The purpose of this briefing is to summarize wastewater disposal issues in the City of Malibu.

Background

The City of Malibu, which has an area of 19.6 square miles, lies along the southern slope of the Santa Monica Mountains. As land in the City has steep terrain, most development is clustered along the coast or in the Malibu Valley.

The City incorporated in 1991, largely due to differences with the County of Los Angeles over construction of a regional wastewater collection system. Upon the City's incorporation, the County agreed, per a Settlement Agreement with the new City, to cease efforts to install a wastewater collection system. Today, there are over 12,000 residents in the City, about 10,000 of whom rely upon an estimated 6,000 septic systems for the disposal of their wastewaters. The remaining residents (roughly 2,000) rely on 5 package plants, which provide at least a secondary level of wastewater treatment before disposal to underlying ground water.

Water Resources

Water resources in the City of Malibu include:

- **Inland surface waters:** Small coastal streams drain the southern slope of the mountains. While these streams are naturally ephemeral (flowing part of the year), deliveries of large amounts of imported water into the Malibu Creek watershed—and the resulting wastewater discharges—have created flows in Malibu Creek throughout the year. This has caused complex problems in the lagoon at the mouth of the creek, and for remnant steelhead runs. In addition, several stretches of Malibu Creek have been dammed, creating reservoirs constructed for water conservation or recreation.

- **Coastal waters:** Malibu's beaches are a popular destination not only for people in our Region, but for tourists as well. Surfrider Beach is one of the best "break points" in southern California. And lagoons along the mouths of coastal streams, such as Malibu Lagoon and—to a lesser extent—Trancas Lagoon, provide valuable wetlands habitat.

- **Ground waters:** Historically, ground water was the primary source of potable water in the area, and was pumped from small alluvial aquifers (and, to a lesser extent, from fractured bedrock). Numerous wells pumping from aquifers along the coast and in the canyons provided water not only for drinking and for agriculture (primarily ranching) up

until the 1960s. Coastal aquifers are in hydraulic connection with the ocean and overpumping in some stretches of the coast led to localized intrusion of sea water. This, coupled with impacts from septic systems, contaminated several wells in the area. At present, ground water is not a significant source of drinking water, and production is limited to an undetermined number of homes in the hills and canyons above Malibu. Discharges of wastewaters throughout the City are to underlying ground water.

- **Imported waters:** In the 1960s there were about 6,500 people in Malibu, all of who relied upon ground water. As degradation of ground water continued, the West Basin Municipal Water District started delivering imported water into the area.[1] The LA County Waterworks District No. 29 retails these deliveries of imported water, which total about 8,500 acre-feet per year.

- **Reclaimed waters:** The Marblehead Land Company (formerly known as the Adamson Companies) reclaims a portion of its treated wastewater from its package plant serving the Point Dume Mobile Home Park. And the County of Los Angeles, which operates the Malibu Mesa package plant, reclaims a portion of its treated wastewater from its package plant serving Malibu Country Estates and Pepperdine; the reclaimed wastewater is used for landscaping at Pepperdine University, just outside the City's boundaries.

The *Basin Plan* designates numerous beneficial uses for these waters, among which include: various aquatic life designations (e.g. warm water habitat, cold water habitat); rare, threatened, and endangered species; contact and non-contact recreation; and drinking water (inland surface waters and ground waters). The ground waters are a potential source of potable water in the event of disruptions to deliveries of imported water. These limited resources of ground water, however, should not be regarded as more than a short-term supply of water in emergency situations, and are not capable of sustaining Malibu's current population of over 12,000 residents over the long term.

Strong stakeholder concern has led to extensive, on-going studies of water resources and the attainment of beneficial uses in the Malibu Creek watershed and, in particular, Malibu Lagoon.

Regulatory History

The Board has adopted at least two resolutions concerning the use of septic systems in Malibu, including: Resolution No. 72-4: "Policy Statement Relative to Sewage Disposal in the Malibu Area" (Attachment 2); and Resolution No. 98-023: "Malibu Creek Watershed" (Attachment 3). The following sections summarize the regulatory history relating to these resolutions. There may be other policy decisions taken by the Regional Board; however, staff has not had time to fully search for and compile historic files and records.

Regional Board Delegation to Local Agencies: Under the California Water Code, section 13269, the Board may waive requirements to file a Report of Waste Discharge (ROWD), provided that

[1] Unlike most inland areas, sewers were not installed concommitent with construction of water supply lines.

such a waiver is not against the public interest. Such actions have the effect of delegating our authority to issue Waste Discharge Requirements. In the 1950s, the Board's predecessor agency granted such waivers, for family dwelling sewage disposal installations, to 45 local agencies in the Region, including the County of Los Angeles. However, the waivers do not formally cover several local agencies that are actively permitting septic systems, including the City of Malibu.

County Regulatory Efforts: In 1965, in response to concerns about septic systems, the County of Los Angeles began planning for sewers in the Malibu area. Shortly thereafter, however, voters twice defeated measures for sewer bonds that the County proposed.

The Regional Board's concern over reliance on septic systems escalated in the early 1970s; in particular, the Board determined a need for sewers and reclamation from Las Flores to Malibu road. And State Board staff adopted an *Areawide Sewage Plan* for Malibu, after determination that "for the most part soil conditions are unfavorable for subsurface disposal, and failures occur rather frequently" (April 13, 1970). Also during this period, the County Health Officer declared a potential health hazard.

In 1972, the Regional Board adopted a policy, Resolution No. 72-4 (Attachment 2), precluding consideration of any applications for waste discharge, unless a developer demonstrated how the discharge would comply with a comprehensive areawide sewerage plan. [2]

By 1975, development pressure had increased, especially with the improvement of the highway along the Malibu coast. During the mid- to late 1970s, the Regional Board, County, and SCAG all expressed concern over siting, installation, and maintenance of Malibu septic systems and, in 1979, the County proposed a prohibition. While it appears that the prohibition was never adopted, the County did continue its sewering efforts throughout the 1980s. At one point, the County's plan called for construction of a trunk line that would hook up to the Hyperion collection system, which begins about 8 miles east of the Malibu Civic Center.

In 1985 and then again in 1988, the County Health Officer declared a health hazard. By the mid-1980s, many residents initiated litigation against the County over the proposed sewer. It was this opposition to sewers, and the desire for local control, that led residents to incorporate in 1991. And by 1993, the City and County settled their litigation, with the County agreeing to drop all efforts to sewer, and with the City agreeing to assume control for wastewater management.

City of Malibu Regulatory Strategy: One of the first significant actions taken by the City was to approve a wastewater management strategy that relied primarily on on-site treatment and disposal—i.e. septic systems. The City did not request, nor did the Regional Board require, the City to apply for delegation to regulate septic systems. Today, the City's regulatory activities are limited to approval of design and installation of on-site treatment and disposal systems. With a limited wastewater management staff and budget, the City's oversight does little to address:

[2] Staff has not yet found any record of rescission of Resolution No. 72-4.

- Monitoring of water quality impacts from septic systems.
- Existing septic systems, many of which are old and problematic.
- Operation and maintenance of septic systems.
- Disposal of septage (sludge that needs to be periodically pumped and hauled).

Also, the City's wastewater management strategy does not include the five package plants. Rather, these package plants are operated either by contractors hired by homeowners, or by the County on behalf of the homeowners.

Recent Regional Board Strategy: In response to strong stakeholder concerns expressed at the Board's public meetings in 1998, and a petition from the Santa Monica Baykeeper, the Regional Board directed staff to proceed with a directive requiring the City of Malibu to undertake a technical investigation of the impact of discharges from septic systems. Staff issued such a directive in June 1998, under authority specified in section 13267 of the California Water Code. On December 14, 1998, in response to the City's failure to submit a workplan for the technical investigation as required by the directive, the Board adopted Resolution 98-023: "Malibu Creek Watershed" which, in part, directed staff to issue a Complaint for Administrative Civil Liability (ACL) for failure to comply with the Regional Board's directive. In early 1999, the City did submit, on a "voluntary basis," a Workplan. However, staff determined that this Workplan was inadequate to resolve the issues posed by the Board's directive, which included:

1. What are the impacts from septic systems for which the City is responsible, including the septic system at 23555 Civic Center Way?
2. What are the cumulative impacts from the City's septic systems as well as from other septic systems?
3. How effective are the City's current regulatory efforts in mitigating public health risks and other water quality impacts from discharges from septic systems?
4. What additional measures are needed to remedy impacts that are not adequately addressed by existing regulatory efforts?

On April 8, 1999, staff issued an ACL in the amount of $5,700. At a public hearing on May 27, 1999, the Board heard evidence from the City contesting the need for a technical study, and also contesting the Board's authority to direct the City to undertake the technical investigation. Furthermore, the City indicated a willingness to undertake the technical investigation on a voluntary basis. In response, the Board directed staff to rescind the ACL, which was done on June 1, 1999. Additionally, Board Member representatives met with City officials, which subsequently led to a commitment from the City to expand the focus of the technical investigation.

Current Board Strategy

Staff are in the process of revising WDRs for package plants, as explained below, using funding available under the Non-Chapter 15 Program (discharge of wastewater to ground water). Annual permitting fees for these package plants are $1,200. Please note, however, that this effort

to expedite WDR revisions in Malibu hampers staffs' ability to reduce the WDR backlog in other areas.

As the Board has no funding for the technical investigation, staff has relied upon non-Chapter 15 funding to support this special effort. To date, staff has collected a minimum of 11 rounds of samples, and shared preliminary results with concerned parties. A brief report is included in under the "Malibu Technical Investigation" section, in this document.

Package Plants: There are a total of five package plants located in and around the Malibu Valley area. These package plants serve about 5,500 people. This year the Regional Board completed its update of the WDRs for these package plants. Prior to November 1998, the WDRs for these package plants contained no limits and only minor monitoring requirements. Accordingly, since November 1998, staff have expedited revision of these WDRs and employed a strategy of encouraging dischargers to upgrade their plants to tertiary treatment levels. However, those plants that do have tertiary treatment are limited in the amount they can reuse for irrigation, given the lack of land. At least three of the package plants were designed to be temporary, as the County expected to replace them with a regional sewer system. This, however, did not occur, and as a result, three of the plants, which have exceeded their design life of 20 years, are in need of maintenance and repair. Some of the plants and their associated leach fields are also constructed in inappropriate areas, sometimes within feet of a streambed or the ocean, and cannot be relocated due to a lack of available land. In cases where dischargers have found reclamation to be too expensive and/or infeasible (not enough land), the Board has required disinfection to 200 MPN/ml (protective of body contact recreation). This disinfection requirement is based on (a) the high water table in the Malibu area (specifically, the inability of the discharger to maintain a 10-foot vertical separation between the leachfield and water table); (b) the potential for the effluent to daylight into surface water; (c) the limited assimilative capacity of the vadose zone and groundwater to absorb and effectively treat the increasing wastewater loads; and (d) the proximity of beaches to the leachfields.

Package Plant	People	Daily Dry Weather Flow	Treatment Level	Homeowner Costs
Tivoli Cove	200	19,800	Secondary	$280
Trancas	600	75,000	Secondary[3]	$2,045
Malibu Pollution Control	400	38,250	Secondary[4]	$1746
Malibu Mesa	3,360[5]	177,000	Secondary and Tertiary	$809
Point Dume	860	48,000	Secondary and Tertiary	$720

Furthermore, the costs associated with running these plants are relative high and result in residents paying up to $2,045 a year, some of the highest sewage-treatment costs in the state. The developer of a newly proposed plant, Rancho Malibu, projects that the annual costs per household will exceed $2,300. Please note that, although this developer will be installing potable water supply lines from the Las Virgenes Municipal Water District, costs to install a connection to the Las Virgenes sewer system are prohibitive; staff have requested that the developer submit a feasibility study verifying this conclusion. Finally, please also note that dischargers still using septic systems with little to no associated maintenance costs are often located very close to the package plants.

Despite the significant expense and temporary nature of package plants, staff is aware of at least two plants proposed in the Malibu area in the near future. The Board already issued a WDR/WRR for one of these, a proposed 16,000-gallon per day, tertiary treatment plant in Rancho Malibu (just outside of the City boundaries), in 1991. However, construction was never started, and the most recent owner has significantly changed the scope and design of the project. Accordingly, WDRs now must be rescinded or revised. Also, staff has reviewed the draft EIR for two additional projects in the Civic Center area, Malibu Village and Malibu Country Park, which will be served by a joint package plant. Staffs' concerns include, among other issues; the feasibility of disposal of large volumes of treated wastewater through irrigation, the assimilative capacity of ground water in Winter Canyon and the proximity of beaches to the leachfields.

On a policy level, proliferation of these package plants results in fragmented management of wastewater disposal, inconsistent regulatory requirements, and a great disparity in costs to homeowners. For example, Attachment 3 shows the proximity of the Trancas package plant (Water Pollution Control Plant) to Trancas Town and Lunita Pacific. Under recently revised WDRs, the 600 people who discharge to the Trancas package plant will bear annual costs that are projected to rise to about $2,045 per home, pending repair and upgrade of the plant. However, the neighboring Lunita Pacific development of 38 condominiums discharges up to 9,500 gallons

[3] The Regional Board has required the Malibu Water Pollution Control Plant to repair equipment and add disinfection by June 2001, per a Time Schedule Order.

[4] The Regional Board has required Trancas to repair equipment and add disinfection by July 2002, per a Time Schedule Order.

[5] Most of the 3,360 people served by the Malibu Mesa Plant are students at Pepperdine.

per day into a septic system under a Regional Board Order. Trancas Town, another nearby development of about 20 homes, also proposes to discharge into a septic system. Also, there are many single-family homes in the area, permitted by the City of Malibu, which discharge into individual septic systems, at little or no cost to the homeowners.

Septic Systems: About 10,000 people in the City rely on approximately 6,000 septic systems to discharge their wastewater into groundwater. These septic systems, for the most part, were installed many years ago. As per the City, records relating to the number, location and construction details of septic tanks and leachfields installed prior to 1992 are poor. Conventional septic systems continue to be installed under City oversight, however, staff has been informed that the City now requires secondary treatment. Note that these systems have no monitoring or waste discharge requirements, and as a whole may have an impact on groundwater and surface water that is equal to, if not greater than, the commercial systems operating under WDRs issued by this Board. Maintenance costs for these septic systems, consisting mainly of pumping solids out of the tank on an annual basis, amount to about $150 per year.

Septic System Costs (typical)

Action	Cost	Frequency
Installation	$3,000 to $10,000	One Time
Maintenance	$ 150	Annual

Existing Septic Systems (from the City of Malibu info, 4/00)

Type of Wastewater	Number of Units	Units
Commercial	About 60	Hotels and Shopping Centers
Multifamily	About 20	Condominiums, Triplexes, Unknowns
Single Family	6,000	Single Family Homes

Septic systems consist of a tank that separates the solid and floatable materials from sewage and discharges the effluent into a leachfield or seepage pit. Bacteria in the effluent are reduced to safe levels between the leachfield and the groundwater table. In order to function effectively, the Regional Board requires that dischargers maintain 10 feet of separation between the bottom of the leachfield and the groundwater table. The high groundwater table in Malibu area does not allow for this separation in most cases. This condition is exacerbated by the closely spaced and clustered septic systems and leachfields found throughout Malibu. Furthermore, increases in the groundwater table caused when Malibu Lagoon is closed and during the rainy season periodically flood septic system leachfields effectively resulting in direct discharge of septic system effluent into the groundwater. This was evidenced during the recent Malibu Technical Investigation.

Per Board directive, staff are undertaking two projects, namely: permitting commercial septic systems, and a joint technical investigation of impacts to groundwater and nearby surface waters in the Malibu Valley from septic system discharges to groundwater.

Permitting Commercial Septic Systems: We are currently focusing our attention on commercial septic systems in the Malibu Valley area. The reason is they discharge high volumes of septic system effluent to the groundwater. In the case of the commercial areas near PCH and Malibu Creek, they discharge 10's of thousands of gallons of primary effluent per day. These systems discharge wastewater that is well above any water quality standards. The groundwater here is in hydraulic connection with the Malibu Creek.

The commercial dischargers fit three categories, they either:

- Don't have a permit from the RB but have been contacted by us, and are in the process of obtaining a permit. We are working on permitting 12 of these; about ½ of these permits will come before the board in this fourth quarter and the first quarter of 2001.
- Don't have a permit and aren't yet aware they will be required to get one. We stopped contacting dischargers because we needed to stay on top of our efforts to permit the dischargers we had already contacted. We don't have the resources to issue all the commercial permits at once; instead we are doing this incrementally.
- Seven dischargers have an existing permit that needs to be updated

We estimate there are at least 30 commercial dischargers in the Malibu Valley area that will need permits- these are shopping centers, hotels, condominiums, and industrial areas. These all discharge wastewater through septic systems. We are concerned about industrial sites that use septic systems - these typically have smaller volume discharges than a shopping center for instance, but their discharge may contain chemicals like VOC's. Timing to complete the permitting is 2 to 5 years.

Staff is currently updating and will be issuing new septic system WDRs for 14 commercial and multi-family facilities, including:

The Malibu Bay Company, a discharger with 33 mixed retail and commercial businesses (attached);
The Malibu Bay Club, a 134-unit condominium and residence complex;
The Malibu Bay Gardens, a 56-unit townhouse community;
The Malibu Bay Preservation Company, mixed retail and commercial businesses;
Trancas Town, a 15 home and 52 unit condominium complex; and
Paradise Cove, a 257-unit mobile home park with 29 septic tanks and 29 seepage pits.

Staff will also propose, for adoption by the Board, revised WDRs for Chateau DeVille, a proposed 22-unit condominium complex with a permit to discharge primary treated effluent into 40 seepage pits at little to no cost to the homeowners. The proposed complex is adjacent to the Malibu Waste Water Reclamation Plant, producing a secondary treated, disinfected effluent at a annual cost of $1,746 per homeowner. The developer has agreed to connect the proposed

development to the Malibu Waste Water Reclamation Plant. Staff propose that the existing WDRs be rescinded upon connection to the treatment plant, or by August 31, 2001.

Staff is also developing WDRs/WRRs for Rancho Malibu, a proposed 46 unit residential project.

The objective of our effort is to issue waste discharge requirements to the commercial dischargers requiring the dischargers to monitor the effluent from each of their septic systems and the groundwater. Some dischargers will have to conduct surface water monitoring too. Regional Board staff expect that this new monitoring will delineate the impacts to groundwater and surface water. The reason is that the commercial dischargers discharge high volumes of wastewater that is not treated (or if it is treated- it isn't treated to a high level), and we already know that this causes water quality degradation.

The monitoring we are requiring is appropriate. The Malibu Valley area poses unique obstacles for subsurface disposal given the shallow groundwater, surface and groundwater interactions, high wastewater volumes, number of dischargers, pollutant mass, and of course the potential impacts to human health, such as at Surfrider Beach. From an economic standpoint, the dischargers know the monitoring will be costly, and seem to acknowledge that water quality problems will be documented. The dischargers are aware that the costs of this type of monitoring on a regional or citywide scale will be substantial.

We have spoken with several commercial dischargers, and they believe the costs of additional monitoring will be so expensive that the costs approach a public works project. Because of this, the commercial dischargers have suggested that a municipality like the City of Malibu should step forward and construct a more efficient wastewater disposal infrastructure. The dischargers also acknowledge that the City won't accept this leadership role. Instead the City is requiring commercial dischargers to install high tech septic systems. Unfortunately, the City is not requiring these high tech septic systems to remove nutrients and pathogens; instead the Regional Board must do this.

Conclusion

In July 1999, the Board discussed several priorities, among which include continuation of investigation of impacts associated with the use of septic systems in the communities of Malibu, Agua Dulce, and El Rio, and to implement Board resolutions related to this issue. Limited funding for the Malibu effort has made it difficult to develop specific policy, issue new permits, and complete a technical investigation all at the same time. The Board may want to consider an updated resolution that sets forth a specific policy or strategy for management of wastewater and protection of beneficial uses in the City of Malibu.

With regard to package plants, staff has completed revisions to five package plants. Also, new WDRs/WRRs are being sought for proposed developments with package plants, such as Rancho Malibu. Before staff proceeds with these WDRs, a Board policy that outlines criteria for package plant siting, management, standards, and monitoring would be appropriate.

Various policy options, considered by the Board in the past, include:

- Encourage stewardship
- Recommend financial assistance from grant programs (when available)
- Delegate authority[6]
- Expand permitting efforts[7]
- Issue a prohibition on septic systems

Encourage Stewardship: Agua Dulce, located in an unincorporated portion of northern Los Angeles County, is a rural community of about 4,000 to 5,000 people. As the area has not been sewered, people in Agua Dulce discharge wastewaters into septic systems, thereby threatening the quality of ground water (which is the sole source of drinking water in the area). In response to formal requests from community leaders, the Regional Board has encouraged "stewardship" of water quality through wellhead protection, as a properly-designed and implemented wellhead protection program can, in some areas, adequately reduce the threat to water quality by managing groundwater recharge areas. Wellhead protection measures can range from simple housekeeping practices in rural developments, to extensive and comprehensive land use planning and zoning.

Although stewardship has the potential to mitigate pollution from septic systems at costs that should be acceptable to a community, the Board's regulatory resources to oversee such a program are, at present, extremely limited. Therefore, the burden of developing and implementing a successful wellhead protection program rests with community leaders. Furthermore, the likelihood of success of stewardship efforts is uncertain.

Provide Financial Assistance: El Rio, a low-income community located in an unincorporated portion of Ventura County, is another area that has not been sewered. For several years, State and County health officials have expressed concern over threats to the quality of the underlying Oxnard Plain ground water. In August 1999, the Regional Board issued a prohibition of septic systems for the Oxnard Forebay, which is pending approval by State Board and the Office of Administrative Law. The Board and staff have actively encouraged the County of Ventura to apply for grants and subsidized loans. Also, Assemblyman Strickland (Republican) has a district bill, AB 1885, pending before the Legislature. If passed, this bill would provide financial assistance of up to $5,000 per home in the Oxnard Forebay area.

---

[6] As explained on page 2, although the Board has delegated permitting authority to many local agencies, such a delegation has never been made to the City of Malibu. The Board has the option to evaluate new waivers or reevaluate existing waivers and, based on findings, issue new/revised waivers. A new waiver to the City of Malibu could include specifications for permitting programs, such as design, location, spacing (density), flow restrictions, water quality standards, maintenance requirements, and monitoring.

[7] Although the expansion of permitting efforts would improve compliance with the California Water Code, it would not achieve significant water quality benefits. Conventional septic systems are passive treatment processes, which are not capable of meeting water quality objectives in receiving waterbodies. The fact that a septic system may have a permit does not improve the quality of the wastewater being discharged. Many developers are optimistic that higher-tech septic systems can meet water quality objectives. However, to date, supporting data have not been submitted to the Regional Board. Furthermore, complex septic systems require a higher degree of maintenance on the part of owners. Finally, even if all future septic systems are high-tech septic systems, we are still left with the problem of water quality threats from existing septic systems.

Delegate Authority: As explained on page 2, the Board has delegated permitting authority to many local agencies, such a delegation has never been made to the City of Malibu. The Board has the option to evaluate new waivers or reevaluate existing waivers and, based on findings, issue new/revised waivers. A new waiver to the City of Malibu could include specifications for permitting programs, such as design, location, spacing (density), flow restrictions, water quality standards, maintenance requirements, and monitoring.

Expand Permitting Efforts: In order to extend our regulatory oversight, the Board may expand its permitting efforts. To the extent allowed by current funding levels, staff is already doing this. Although expansion of the Board's permitting efforts would improve compliance with the California Water Code, it would not achieve significant water quality benefits. Conventional septic systems are passive treatment processes, which are not capable of meeting water quality objectives in receiving waterbodies. The fact that a septic system may have a permit does not improve the quality of the wastewater being discharged.

Many developers are optimistic that higher-tech septic systems can meet water quality objectives. However, to date, supporting data have not been submitted to the Regional Board. Furthermore, complex septic systems require a higher degree of maintenance on the part of owners. Finally, even if all future septic systems are high-tech septic systems, we are still left with the problem of water quality threats from existing septic systems.

Staffing constraints also need to be considered when discussing permitting efforts. Before committing to a new permitting program, the existing backlog of permit applications, monitoring reports, inspections, and compliance tasks needs to be addressed.

Issue Enforcement Orders: The California Water Code, section 13280, authorizes the Board to prohibit discharge of waste from existing and new septic systems where there is substantial evidence of pollution, nuisance, unreasonable degradation of water quality, impairment of beneficial uses, or violation of water quality objectives. Although some members of communities on septic systems would experience hardship from a septic moratorium, many others would welcome such a regulatory development as they assume it would stop anticipated growth. To date, this Regional Board has issued only one prohibition, for the Oxnard Forebay. Adopted by the Regional Board in August 1999, this prohibition is still pending approval by State Board and the Office of Administrative Law.

The California Water Code also authorizes Executive Officers to issue requests for technical studies (section 13267) and Cleanup and Abatement Orders (section 13304). This approach has already been tried with the City of Malibu, with inconclusive results to date.

Preliminary Results of the Malibu Technical Investigation

August 18, 2000

Los Angeles Regional Water Quality Control Board

Executive Summary 1

Malibu Technical Investigation Objective 1

Study Area 1
- *Study Area Description* 1

Methodology for the 1999 Joint Field Investigations with the City of Malibu 1
- *Study Premise* 1
- *Sampling Plan/Protocol* 2
- *Field Investigation Protocol* 2

Discussion of Other Studies and Data 4
- *1994-Irwin Study* 4
- *1999-Woodward Clyde Phase 1* 4
- *2000-Woodward Clyde Phase 2* 5
- *1999-Draft Final Report to the California State Coastal Conservancy* 6
- *Regional Board Review of Storm Drain construction August 2000* 6
- *Las Virgenes Municipal Water District Tapia Water Reclamation Facility* 7
- *(1999 Annual Report)* 7
- *West Basin Municipal Water District, LA County Service Area No. 29-Malibu* 7
- *Pumping of Septic Systems* 7

Results 7

Discussion 10

Conclusions 12

Figures *Divider A*

Tables *Divider B*

Attachments *Divider C*

Executive Summary

The Regional Board collected groundwater and surface water samples during eleven separate sampling events. Six of these sampling events were conducted during a joint technical investigation with the City of Malibu's consultant. The sampling points were selected to be representative of groundwater, Malibu Creek, Malibu Lagoon and the near shore zone of the Pacific Ocean. Groundwater elevations in the study area are strongly influenced by water elevations in Malibu Lagoon, and less strongly by tidal fluctuations. Samples were collected while the lagoon was closed and water elevations were high, immediately after the lagoon breached and water drained out quickly, and after the lagoon reached a post-breach steady state and water elevations were low. Samples were analyzed for ammonia, nitrate, nitrite, organic nitrogen, methylene blue active substances, total and fecal coliform, E. Coli, enterococcus; substances indicative of sewage.

Water elevation data shows that groundwater in the study area is in hydraulic connection with, and flows into, Malibu Creek, Malibu Lagoon, and the near shore zone, such as Surfrider Beach.

Sample analysis shows that the constituents typical of sewage were present in the groundwater adjacent to septic system leachfields, Malibu Creek, Malibu Lagoon, and the near shore zone.

The Regional Board therefore concludes that septic systems in the Malibu Study area contribute to the pollution of groundwater, Malibu Creek, Malibu Lagoon, and the near shore zone.

Malibu Technical Investigation Objective

The objective of this study was to determine if septic systems in the Malibu Valley are impacting groundwater and surface water including Malibu Creek, Malibu Lagoon, and the Pacific Ocean.

Study Area

Study Area Description

Malibu Creek at Cross Creek Road, to Malibu Lagoon. From Malibu Lagoon up the coastline along Malibu Colony to Winter Canyon. From Winter Canyon back to Malibu Creek at Cross Creek Road.

Methodology for the 1999 Joint Field Investigations with the City of Malibu

Study Premise

Groundwater is believed to be in hydraulic connection with septic system discharges and surface waters. The degree of hydraulic connection is a function of wastewater loading, and elevations of the groundwater, the creek, the lagoon, and the ocean (tidal stages). As the tide, creek, or lagoon water levels decline, groundwater (degraded by septic system discharges) is released to surface water, causing degradation of surface waters and water quality at Surfrider Beach.

Sampling Plan/Protocol

Samples were collected on Mondays or the first day after a holiday weekend. This is because Regional Board staff believed that higher wastewater discharges occur during the weekends and holiday periods of high occupancy and tourism, and therefore generate more water pollution. Sample collection was timed to coincide with the low tide conditions as that represents the greatest potential for groundwater to flow to surface waters. Two sampling events were conducted prior to the Malibu Lagoon breaching, two immediately following the breach and two after steady state conditions could be inferred. The Regional Board and City of Malibu sampled groundwater and surface water. Water samples were analyzed for bacteria[1], nutrients[2], and surfactants[3] (a well-documented, short list of pollutants in septic system discharges).

The Regional Board collected all samples with disposable bailers, or sampling equipment that was washed in a three-bucket wash. The first bucket contained non-phosphate soap routinely used for environmental sampling, and chlorine bleach. In order to reduce the likelihood of false positives for bacteria, bleach was added to the wash water to decontaminate sampling equipment. All samples were placed in ice chests and kept a minimum of 4 degrees centigrade.

Field Investigation Protocol

a) Water Level Monitoring

- Monitoring Wells and Lagoon
  Monitoring wells were manually gauged prior to sampling. Monitoring wells P-2 and C-1, as well as a piezometer located in Malibu Lagoon at the PCH Bridge contained continuous data loggers that record the water levels every hour.
- Tide Stage
  All sampling events were timed as close to low tide as possible. A 1999-tide chart was used to determine when the low tide would occur.

b) Groundwater sampling

- Monitoring Wells
  Monitoring wells were purged of three to four well volumes of water. Total dissolved solids, pH, and electrical conductivity were recorded on field data sheets.

- Borings
  Shallow temporary borings were installed at pre determined locations on the beach (Figure One). The borings were placed at the high tide line, usually delineated by material like driftwood, seaweed or other debris. The borings were installed using a hand auger and 6 inch PVC pipe. Once groundwater was encountered in the boring, the PVC pipe was driven 1-2 feet deeper while augering. The hand auger was removed, and the temporary well was bailed with a disposable bailer. The temporary casing was then removed, the hole filed, and the next location sampled.

[1] Total and Fecal Coliform, Enterococcus, and E. Coli.
[2] Ammonia, Nitrate, Nitrite, Organic Nitrogen, Phosphate, Orthophosphate.
[3] Surfactants are from soaps, in this case Methyl Blue Activated Substances were tested.

c) Surface Water Sampling

- Stormdrain Sampling
  Stormdrains were sampled using a pole-mounted sampler or a dedicated bottle. If discharge from the stormdrain was a low flow or at a trickle, the fluid exiting the stormdrain was sampled. If surface water would back-up to and fill the mouths of stormdrains, water samples would be collected near the outlet of the drain. If there was no flow from the storm drain or any back-up of surface water in the drain, surface water nearest the stormdrain was sampled.

- Malibu Creek Sampling and Malibu Lagoon Sampling
  The Regional Board collected surface water samples from 8 locations in Malibu Creek upgradient of the Cross Creek Shopping Center where Cross Creek Road crosses Malibu Creek. Please see attachment A for descriptions and a map of sample locations.

- Surf Zone Sampling
  Surf zone samples were collected in water that was approximately 2 feet deep. Samples were collected seaward of the beach boring samples (Figure One). Samples were collected using a pole-mounted sampler or a beaker held by hand. The beakers were decontaminated prior to use at each new location.

d) Septic Tank and Distribution Box Sampling

February 18, 2000:

- Samples were collected from one septic tank located in the Hughes shopping center, and one distribution box in Winter Canyon, that the Malibu Bay Company discharges to. See Attachments 2A, 2B, and 2C.

- Samples were collected from one distribution box and three septic tanks located in the Cross Creek shopping center that the Malibu Creek Preservation Company discharges to. See Attachments 3A, and 3B.

June 8, 2000

- Samples were collected from nine septic tanks that Koss Real Estate Investment discharges to located south of Civic Center way, located next to the Malibu Creek Preservation Company's property on both sides of Cross Creek Road. See Attachments 4A, 4B, and 4C.

e) Duration of Joint Fieldwork

Joint Field work was implemented on, and samples were collected on August 2, and 9, November 11, 15, 22, and 29, 1999. The Regional Board also conducted its own fieldwork and sampling on August 18, 25, 31, and September 7, 1999.

Discussion of Other Studies and Data

1994-Irwin Study

In November 1986, the Texaco service station located at 23387 Pacific Coast Highway at Cross Creek Road began investigating a release of petroleum to groundwater from the site. Groundwater impacted by petroleum and soil vapor plumes containing hydrocarbons extended from the west side of the Texaco station, to the eastern property line of the station. In 1987 an elongated plume of petroleum hydrocarbons extended from Texaco, toward Malibu Creek (plume was under the parking lot between Texaco and Malibu Creek). See Attachment 7A and 7B. The highest concentration of hydrocarbons was detected at the southern parking lot boundary at the base of a fill slope for PCH and coincident with the stormdrain 2. A detailed study was undertaken by the Irwin Company to address the release. The April 6, 1994, final report from Irwin[4] regarding the release from the Texaco site, stated that groundwater is "low quality" due to septic system discharges-citing high TDS and chloride. Over 50 groundwater wells or borings were installed to evaluate discharges of gasoline from the site. The Irwin investigation describes that a plume of hydrocarbons moved from the Texaco site toward Malibu Creek along the fill slope that PCH is built on, and more specifically, coincident to the buried storm drain (stormdrain number two built by a private developer).

1999-Woodward Clyde Phase 1

Woodward Clyde on behalf of the City of Malibu undertook an investigation of septic system impacts to groundwater. The June 1999, "Study of Potential Water Quality Impacts on Malibu Creek and Lagoon from On-Site Septic Systems[5]" from URS Greiner Woodward Clyde, is often referred to as the "Dye Study." In fact, the original proposal was to conduct a dye study; however strong opposition from homeowners in the Malibu Colony area and others precluded the dye study. The opposition also precluded the installation of three monitoring wells in the Malibu Colony that could have been used to determine groundwater quality and flow direction. The 1999 study by Woodward Clyde focussed on using a phage, a bromide tracer, inducing groundwater flows through a pumping a well, and groundwater sampling and analysis.

The report stated that the lagoon ecology has declined as urbanization increased, and that Surfrider Beach was polluted with fecal microorganisms discharged from Malibu Lagoon. The study investigated two "study areas" (monitoring wells near Malibu lagoon and in the Cross Creek Shopping Center), and three stormdrains. The study tested the groundwater nearby a leachfield that was dosed with just one (of many) septic systems in the Cross Creek Shopping Center.

The report stated that groundwater elevations are a function of tides to a degree and during tidal changes, the groundwater gradient is maintained toward the lagoon. Long term monitoring of water levels indicated an overall groundwater gradient during high tides to the southeast (toward

---

[4] April 6, 1994, "Closure Summary Report Texaco Service Station 23387 Pacific Coast Highway, Cross Creek Road, Malibu, California." W.W. Irwin, Inc. Long Beach, CA

[5] June 1999, Final Report, "Study of Potential Water Quality Impacts on Malibu Creek From On-Site Septic Systems." URS Greiner Woodward Clyde.

the lagoon). At low tides, the gradient steepens and the flow direction shifts to the east-southeast (toward the lagoon). Groundwater flow along the northern portion of the study area near the Malibu Colony was gathered from monitoring wells C-1, C-2. The groundwater flow near C-1 and C-2 is reported to be towards the north (toward Malibu Lagoon).

Water quality from well C-1 indicated it had a relatively elevated Na and CL concentration compared to other wells. Water quality in Well P-1 (an upgradient well) is enriched in MgSO4. Groundwater from P-6 (near septic system leachfields) contained slightly elevated Na and Cl.

Storm drain sampling:
Sediment was sampled at stormdrain outfalls. The sediment samples contained coliform. The report stated that coliform was partly derived from fecal sources. Some soil samples had a lack of fecal coliform, but that could have been because it died off, rather than not being present initially. Sediments at the outfall of SD-1 had the highest concentration of indicator bacteria. This suggests that SD-1is a preferential pathway for bacteria.

Coprostanol, Epicoprostanol, and Coprostanone were also analyzed. Coprostanol and Epicoprostanol were detected at high concentrations in sediment samples at storm drain outfalls. The highest concentrations were at SD-2 near PCH, suggesting the highest input of human fecal material.

Linear Alkyl Benzenes are related to cleaning agents and detergents. These also break down in an order; LAB's with external substituted isomers are more readily biodegraded than those that have internal substituted isomers are. The ratio of the internal to external isomers provides an indication of the rate of biodegradation with values less than 1 indicating little or no degradation. Ratios greater than 1 indicate that the compounds have degraded. LAB's were detected in sediment samples at SD-1 and SD-3 up to 0.16ng/g. LAB's detected at SD-2 were up to 21.36 ng/g. All samples were enriched in external isomers, indicating that the discharge of anionic surfactants have undergone little, if any, biodegradation. Therefore, the results suggest that there are ongoing contributions of these compounds from stormdrains to the creek, lagoon, and Surfrider Beach.

2000-Woodward Clyde Phase 2

The 1999 Joint Field Investigations with the City of Malibu spawned a second report from Woodward Clyde: "Study of Water Quality in the Malibu Lagoon Area, City of Malibu, California-Phase II[6]." The Regional Board received this report in May 2000 and it discusses the fieldwork, sample results, and contains a number of conclusions.

The report concludes that during closed lagoon conditions the water level in the lagoon and surrounding groundwater in the alluvium (such as underneath parking lots containing leachfields) rises. The report goes on to state that Malibu Creek and Lagoon receive bacteria from stormdrains, and a possible source is septic systems and animal urine and feces. The report further states that discharges at stormdrains 2 and 3 are consistent with sewage contamination,

[6] April 17, 2000, "Final Report, Study of Water Quality In The Malibu Lagoon Area, City of Malibu, California-Phase II" URS Greiner Woodward Clyde.

the water source could be from groundwater infiltrating the stormdrains. Sewage, fertilizers, or animal waste may impact the groundwater.

The report states that once the groundwater levels decline, more microbial reduction occurs in the wastewater before the wastewater enters the groundwater. Nitrogen in groundwater indicates that the groundwater is moving towards Malibu Creek and Malibu Lagoon following the lagoon breach. Finally, the report states that there is an indication of sewage inputs at the western end of the study area near the Malibu Colony and Winter Canyon. This area is near a stormdrain and drains the Winter Canyon area. Approximately 80,000 gallons per day of wastewater are discharged to the groundwater in Winter Canyon just north of PCH on a daily basis.

1999-Draft Final Report to the California State Coastal Conservancy

In February 1999, the University of California, Los Angles released the following report: "Lower Malibu Creek and Barrier-Lagoon System Resource Enhancement and Management, Draft Final Report to the California State Coastal Conservancy[7]." The report discusses the evolution of the watershed and how development has altered the watershed. Some of the alterations are the construction of roads, stormdrains, filling in of wetland areas, increased runoff and baseflow. The report also discusses eutrophication and how eutrophication can be increased by urbanization of areas. The urbanization causes increases in nutrient discharges to surface water from added baseflow or runoff. Increased baseflow can occur as a result of importing water, septic system discharges, irrigation, and confined animal facilities, for example. The report also suggests that the soils in Malibu and high water tables can limit the soils assimilative capacity to filter effluent from septic systems.

Regional Board Review of Storm Drain construction August 2000

During the 1999 Joint Field Investigations with the City of Malibu the Regional Board sampled four stormdrains. Ammonia, bacteria, and soap-derived chemicals were detected in the discharge from the outlet of stormdrains, or the water beneath them. Stormdrain 3 drains into the Malibu Lagoon. Stormdrains 1 and 2 drain into the Malibu Creek and Lagoon. Los Angeles County constructed Stormdrain 1 in 1973. It drains the Civic Center area. A private developer conducted Stormdrain 2 in 1964. It drains the areas along Cross Creek Road. Construction details were reviewed for Stormdrains 1 and 2 but were not available for Stormdrain 3.

After the construction of stormdrain 2, the private developer requested that the County of Los Angeles take over control of the maintenance of the drain. The County of Los Angeles declined to take over maintenance of the drain shortly after, in part because records indicate it was not constructed according to County standards. Specifically a cutoff wall at the outlet structure was not constructed deep enough. The County required that the cutoff wall be 3 feet and 6 inches below grade, however it was only 2 feet 2 inches below grade.

Stormdrains are placed in excavations or natural drainages to convey runoff to a point where it can be discharged. Stormdrains are typically not placed directly on an excavation; instead they

[7] February 1999, "Lower Malibu Creek and Barrier-Lagoon System Resource Enhancement and Management, Draft Final Report to the California State Coastal Conservancy" University of California, Los Angeles.

are placed on a bed of gravel introduced to the excavation as described in Attachment 8. The sides of the stormdrain are then covered with more gravel until the entire drain is covered, then soils are placed on top to bring the elevation up to grade. The Regional Board believes this is how stormdrains 2 and 3 were constructed.

Las Virgenes Municipal Water District Tapia Water Reclamation Facility (1999 Annual Report)

The Las Virgenes Municipal Water District (LVMWD) ceased discharging to Malibu Creek on May 9, 1999, when the sand berm in Malibu Lagoon Closed. On November 7, 1999, LVMWD began discharging treated wastewater to Malibu Creek. The Malibu Lagoon breached on November 11, 1999, at approximately 0900H. Attachment 5 referred to above shows a plot of the Tapia effluent quality.

West Basin Municipal Water District, LA County Service Area No. 29-Malibu

Regional Board staff reviewed water deliveries to Malibu for the period July 1993 through July 2000. In 1993-1994 water year (July-June) the average monthly amount of water delivered is 690-acre feet. In the 1999-2000 water year, the average monthly amount of water delivered is 792-acre feet. The data show that during summer months water use increases.

Pumping of Septic Systems

There are a number of companies in the business to pump out sewage (known as "septage") from septic tanks in the City of Malibu. These companies use vacuum trucks, pump out the septage and then discharge the septage at various sewage treatment plants outside of the City limits. An estimated 12,000,000 gallons of septage is pumped out of septic tanks within the City limits each year. Septage pumping increases in some areas during the winter and/or when the water level in the Malibu Lagoon is high. During these conditions, leachfields become inundated with water, and they cannot drain the septic system effluent into the groundwater any more. As a result, the septic tank backs up, and must be pumped out.

Results

a) Water Level Monitoring

- Monitoring Wells

  Water levels were recorded manually in all monitoring wells prior to sampling. Data loggers that continuously recorded water levels were installed in monitoring wells P-2 and C-1, and at the PCH Bridge to monitor water levels in Malibu Lagoon.

  Once the Malibu Lagoon breached, the lagoon waters drained into the ocean. The water level in the lagoon measured at PCH dropped over 5 feet in 5 hours. Concordant with this, groundwater levels dropped as measured by the existing monitoring wells. The draining of the lagoon allowed the stored groundwater known to be degraded by septic system discharges, to be released, or drained, to Malibu Creek and lagoon. The groundwater gradient between well P-2 and P-9 (190 feet

away) prior to the lagoon breaching was 0.0021 ft/ft. Soon after (November 15, 1999) the lagoon breached the gradient became steeper between the two wells (0.0044 ft/ft). The steeper gradient is about twice as steep as pre breach conditions and corresponds to a groundwater flow velocity approximately twice the pre breach flow velocity. This corresponds to even less retention time for wastewater in the groundwater. The 1999 Phase I report from Woodward Clyde used Linear Alkyl Benzenes (LABs) measurements to conclude that the retention time of LABs was low. The Regional Board believes the LABs are from septic system discharges.

- Tide Stage
  A 1999 tide chart was used to determine when the lowest tide was for the sampling days.

b) Groundwater sampling

- Monitoring Wells
  Up to seven groundwater monitoring wells (P-1, P-2, P-6, P-7, P-9, C-1, and C-2) were sampled during each of the six joint field work days. All monitoring wells contained bacteria and nutrients.

  Monitoring well P-1 is upgradient of the other wells and contained nitrate at up to 12 mg/L, BOD of up to 2 mg/L, and enterococcus bacteria at up to 8 MPN/100 ml. Monitoring wells P-2, P-9, and P-6, are located in the south end of the Cross Creek shopping center parking lot, just north of Pacific Coast Highway. Stormdrain 2 bisects wells P-2 and P-9 to the north, from P-6 to the south. Well P-2 routinely contained the highest concentrations of septic system derived pollutants (primarily ammonia, bacteria, and MBAS) during closed lagoon conditions. The well is located nearest to one of the 14 leachfields in the shopping center parking lot. Well P-9 east of P-2 and P-6 southeast of P-2 generally contained lower concentrations of septic system derived pollutants. Monitoring well P-7 is located on the south side of PCH and it contained nutrients, bacteria and MBAS. Finally, wells C-1 and C-2 are located on the north side of an access road north of the eastern end of Malibu Colony, and just south of the surface water in Malibu Lagoon. These wells contained ammonia, bacteria, and MBAS.

- Borings
  Shallow groundwater along the high tide line from up to 11 locations was collected starting from south of the restrooms at Surfrider Beach to the western limit of the study area near the buried drainage of Winter Canyon. Shallow groundwater produced from these temporary wells was analyzed for nutrients, MBAS, and bacteria. Generally detections of nutrients were low to non-detect; however ammonia and nitrate were detected. Boring 11, located near the Winter Canyon drainage and a storm drain contained the highest concentrations of all bacteria. Low concentrations of MBAS were detected in many of the borings.

c) Surface Water Sampling

- Stormdrain Sampling

  Four stormdrains were sampled, stormdrains 1, 2, and 3, discharge into Malibu Creek and Lagoon. Stormdrain 1 is the northernmost stormdrain and it drains the area from Webb Way along Civic Center way. Stormdrain 2 drains areas along Cross Creek Road. Stormdrain 3 drains shopping and other areas on the south side of PCH. * Stormdrain 3 may be downgradient of leachfields located in the Malibu Colony. Stormdrain 4 is underneath Civic Center Way near Winter Canyon.

  Discharge from Stormdrain 1 contained up to: 0.4 mg/L ammonia and 2.0 mg/L nitrate, 0.159 mg/L MBAS, > 16,000 MPN/100 ml Total Coliform, >16,000 MPN Fecal Coliform, 16,000 MPN/100 ml E. Coli and > 1,600 MPN/100 ml Enterococcus.

  Discharge from Stormdrain 2 contained up to: 39.2 mg/L ammonia, 0.19 mg/L nitrate, 2.74 mg/L MBAS, > 160,000 MPN/100 ml Total Coliform, > 160,000 MPN Fecal Coliform, >16,000 MPN/100 ml E. Coli and > 1,600 MPN/100 ml Enterococcus.

  Discharge from Stormdrain 3 contained up to: 5.7 mg/L ammonia, 1.4 mg/L nitrate, 0.709 mg/L MBAS, >16,000 MPN/100 ml Total Coliform, > 16,000 MPN Fecal Coliform, > 16,000 MPN/100 ml E. Coli and > 1,600 MPN/100 ml Enterococcus.

  Discharge from Stormdrain 4 contained up to: 1.2 mg/L ammonia, 1.4 mg/L nitrate, 0.287 mg/L MBAS, 16,000 MPN/100 ml Total Coliform, 5,000 MPN Fecal Coliform, 5,000 MPN/100 ml E. Coli and > 1,600 MPN/100 ml Enterococcus.

- Malibu Creek Sampling and Malibu Lagoon Sampling (sampled in addition to the Joint Technical Investigation on August 9, 25, 31, September 7, and November 11, 15, 22, and 29, 1999)

  The upgradient sampling location at Cross Creek Road (shown as CS-1 on Attachment A) contained up to 0.5 mg/L ammonia, 3.3 mg/L nitrate, 0.103 mg/L MBAS, 2,400 MPN/100 ml Total Coliform, 300 MPN Fecal Coliform, 300 MPN/100 ml E. Coli and > 30 MPN/100 ml Enterococcus. The highest BOD for the sample was 3 mg/L.

  The sampling location upgradient of where the discharge of Stormdrain 2 enters Malibu Creek (E-1) contained up to 0.7 mg/L ammonia, 2.8 mg/L nitrate, 0.168 mg/L MBAS, 5,000 MPN/100 ml Total Coliform, 2400 MPN Fecal Coliform, 2400 MPN/100 ml E. Coli and 300 MPN/100 ml Enterococcus.

  Surface water in channels A, B, and C, of the western portion of Malibu Lagoon were sampled. The channels contained up to 3.7 mg/L ammonia, 1.4 mg/L nitrate, 0.267 mg/L MBAS, 160,000 MPN/100 ml Total Coliform, 9,000 MPN Fecal Coliform, 9,000 MPN/100 ml E. Coli and 1,600 MPN/100 ml Enterococcus.

After the lagoon breached, the water draining into the ocean was sampled (sample LB-1). It contained up to: 0.2 mg/L ammonia, 1.9 mg/L nitrate, 0.356 mg/L MBAS, 5,000 MPN/100 ml Total Coliform, 2,400 MPN Fecal Coliform, 2,300 MPN/100 ml E. Coli and >1,600 MPN/100 ml Enterococcus. Surfrider Beach was closed following the lagoon breach.

- Surf Zone Sampling
  Up to 11 surf zone samples were taken each sampling event. The surf zone contained up to: 0.8 mg/L ammonia, 0.4 mg/L nitrate, 0.423 mg/L MBAS, and 1,100 MPN/100 ml Total Coliform, 700 MPN/Fecal Coliform, 700 MPN/100 ml E. Coli, 80 MPN/100 ml enterococcus. The highest bacteria concentrations occurred near Surfrider Beach after the lagoon breached.

d) Septic Tank and Distribution Box Sampling

15 septic tanks or distribution boxes were sampled. Ammonia concentrations ranged from 18.2 mg/L to 88.1 mg/L. Nitrate was detected at a maximum concentration of 0.1 mg/L. Bacteria analyses were greater than 1,600 MPN/100 ml for Total Coliform, Fecal Coliform, E. Coli, and Enterococcus. MBAS was detected 9.7 mg/L.

Data from the above 15 septic system samples were plotted logarithmically on Attachment 5. Note that the nitrogen (ammonia, TKN, organic, nitrite, nitrate) and bacteria concentrations are similar for all septic tank samples. The effluent data from the Las Virgenes Municipal Water District, Tapia Treatment Plant, is also shown on the graph for reference.

Discharge directly to Malibu Creek from the Tapia Treatment Plant operated by the Las Virgenes Municipal Water District began on November 7, 1999. The following is November's average concentrations of effluent. Ammonia <0.2 mg/L, nitrate 8 mg/L, MBAS, 0.1 mg/L, total coliform <1.1 MPN/100 ml. Tapia did not test its effluent for fecal coliform, E. Coli, and enterococcus[8].

e) Duration

Joint fieldwork was conducted during closed lagoon conditions on August 2, and 9, 1999. Joint fieldwork resumed the day Malibu Lagoon breached, on November 11, 1999, and continued on November 15, 22, and 29, 1999.

Discussion

Testing of groundwater prior to this study documented that groundwater had been degraded by septic system discharges (1994 Irwin report, and 1999 Woodward Clyde report). Nitrate pollution of groundwater is a well-known and understood result of septic system discharges. Under typical operation, a septic tank discharges wastewater that contains between 30-60 mg/L of ammonia. The ammonia is retained and oxidized (to nitrate) in the soils. The nitrate is then

[8] Because Tapia discharges a tertiary treated effluent, it is not required to test for fecal coliform unless the total coliform exceeds 2.2 MPN/100 ml.

typically leached to groundwater. Nitrate may not always be leached to groundwater however, in some cases plants or other organisms can denitrify nitrate to a gas. Plants could uptake nitrate, but leachfields are placed below plant rooting zones in order to prolong the life of the leachfield. In the case of Malibu, little to no ammonia in the wastewater is oxidized to nitrate. This ammonia instead reaches the groundwater. The lack of oxidation of ammonia to nitrate is a function of several factors including the fact that large volumes of wastewater are discharged, and this overwhelms the soil system, precluding oxidation. The Regional Board has estimated that 70,000 to 80,000 gallons per day of primary treated septic system effluent is discharged into the groundwater at the shopping centers located near Cross Creek Road, PCH, and Malibu Creek. In addition, commercial areas in Malibu are often paved (reducing oxidation potential) and the groundwater is shallow. One operator of a commercial building has stated that its buildings leachfields are routinely under water. Oxidation of wastewater and pathogen destruction is extremely limited in this case. The Winter Canyon area just north of PCH and south of Malibu Canyon Road receives approximately 35,000 gallons per day of primary treated effluent, and up to 40 thousand gallons per day of secondary treated effluent. The wastewater disposal in the Winter Canyon area is to seepage pits.

Several kinds of bacteria are present in the groundwater, in some cases at the maximum values that are measurable by the test method. The presence of bacteria in groundwater reinforces the case that adequate "treatment" of the effluent is <u>not</u> occurring. Under properly sited and operated septic systems, the effluent will be retained in the vadose zone long enough for the bacteria to be filtered out or die off. This is not the case in Malibu, rather the Bacteria is discharged to groundwater and then surface water with little degradation.

Surfactants, both MBAS and LAB's have been detected flowing or seeping out of stormdrains. Woodward Clyde has stated that the presence of LAB's in stormdrain samples suggests that little attenuation of wastewater is occurring. This supports the above discussions regarding ammonia and bacteria. The presence of MBAS suggests the same. Ammonia and bacteria are also present in high concentrations at some stormdrain outfalls, suggesting a sewage origin, not urban runoff. Water degraded by wastewater discharges that exits stormdrain outfalls contains a high biologic oxygen demand. This water is starved for oxygen, and once discharged into daylight can be oxidized, but only to the degree that it can remove oxygen from the media it is discharged into. For instance, discharge of water with a high biological oxygen demand into fresher (more oxidized) water will reach equilibrium with the fresh water by using some of its oxygen. As this occurs, ammonia in the high BOD water can oxidize to nitrate. As the surrounding water becomes depressed in oxygen, fish kills and odors can result.

The groundwater gradient beneath the commercial areas studied is toward Malibu Creek and Lagoon. The groundwater flows at a higher velocity toward the lagoon when the water level in the lagoon has been lowered, and especially when the lagoon breaches. When the lagoon breaches, the groundwater velocity toward the lagoon has been shown to double. The doubling of the groundwater flow velocity results in even less retention time for wastewater in the subsurface.

Groundwater flows from higher elevations (high head) to lower elevations (low head) and inevitably moves along paths of least resistance. These can be fractures in bedrock, highly

permeable soil horizons; canals cut into bedrock, and buried utilities like water lines, and stormdrains. Stormdrains are a conduit for shallow groundwater and sewage to flow into Malibu Creek and Lagoon. Strong sewage like odors at stormdrain outfalls were not uncommon during this investigation. Water samples and sediment samples suggest that sewage mixed with shallow groundwater is discharged at these locations.

The existing septic systems in the commercial areas are not designed to treat wastewater; they are designed to dispose of wastewater with minimal problems, like odors and surfacing of sewage on the ground. Pollutants present in groundwater and surface water are indicative of septic system discharges, examples are ammonia, bacteria, MBAS, LAB's, and sterols.

Prior to the influence of humans, rainfall, baseflow from upland areas, and to a lesser extent stream-aquifer interactions were the primary sources of groundwater recharge and stream flows in the Malibu Valley. Today, discharges from septic systems in the study area (estimated volume is several hundreds of thousands of gallons per day) are a source of groundwater (and surface water) recharge. These discharges can result in corresponding higher baseflows.

Water use in the area has steadily increased since at least 1993 (the last record reviewed), and accordingly subsurface disposal of wastewater has also increased. The increase of water use corresponds to an increase in subsurface discharge, higher base flows, and more wastewater derived constituents discharged to surface water. Water use increases in the summer months likely because of increased lawn and landscaping irrigation. Conservatively speaking, Malibu has a population of approximately 12,000 residents. Well-accepted water use rates are between 70 and 100 gallons per day per person. This corresponds to about 840 thousand to 1.2 million gallons per day of sewage being discharged to the ground and groundwater within the city limits (which is larger than the study area). The lowest water usage in 2000 occurred in February, and was 459.4-acre feet, roughly 150 million gallons. The maximum water use in the 2000 water year is 1,012.3-acre feet, roughly 330 million gallons.

The Regional Board reviewed prior studies, many of which have similar conclusions to those that the Regional Board has reached; however it does not concur with all conclusions in the reports reviewed above.

Conclusions

Groundwater is polluted as a result of septic system discharges.

a) The nature of septic system effluent is that it is a pollutant. Regional Board staff have sampled 15 nearby septic systems, and have detailed knowledge of many pollutants that exist in the septic system effluent, including volatile organic compounds.
b) Groundwater quality data show that pollutants in groundwater are similar to those in septic systems. Furthermore, the pollutants in groundwater, such as ammonia and surfactants are highly indicative of septic system discharges.
c) Little to no unsaturated zone exists in the Malibu Valley area. The lack of an unsaturated zone results in inadequately treated wastewater. One way the lack of a vadose is documented, is that during high groundwater conditions, septic systems

must be pumped more frequently as their leachfields become inundated with groundwater. Ideally the unsaturated zone would aid in both pathogen removal and reduction of nutrients. This is not occurring in Malibu in many areas as evidenced by degradation of groundwater from septic system discharges.

d) In the past, groundwater in the Malibu Valley was used as a drinking water source. Today, little to no groundwater is withdrawn for use in the Malibu Valley area. Instead, potable water is imported from a different watershed, used, and discharged. The discharge is through septic systems to groundwater, irrigation return flows, runoff to surface waters, and evapotranspiration.

e) The primary export of wastewater out of the Malibu Valley is through subsurface flow or lateral migration to surface waters or groundwater. The wastewater treatment plant at Pepperdine University can pump wastewater to the Las Virgenes Municipal Water District, however this amount, if any is pumped, is small. Finally it is estimated that companies that pump septic tanks in the City limits of Malibu pump up to 12,000,000 gallons per year of septage.

Groundwater is in hydraulic connection with surface waters.

a) Stormdrains act as conduits for polluted groundwater to flow to surface water. Stormdrains may be placed in natural depressions that are historical drainages where groundwater may naturally be discharged to surface water. Stormdrains are placed in gravel filled trenches that can act as a conduit and preferential pathway for fluids, such as polluted groundwater.

b) Groundwater gradients are maintained toward Malibu Creek, meaning that groundwater is discharged to Malibu Creek. The rate that groundwater moves toward Malibu Creek varies. The rate over the time of study is slowest when the Malibu Lagoon is full and not breached. The rate doubles for a period when the water levels in the lagoon drop or when the lagoon breaches.

c) Groundwater is discharged to surface water through aquifer stream interactions. When the stream elevation lowers or groundwater elevation or pressure rises, then groundwater is discharged to surface water.

Septic System Discharges are one cause of nutrient and human fecal contamination of Surfrider beach.

a) Groundwater that has been polluted by septic system discharges enters Malibu Creek and Lagoon through stormdrains and subsurface flow.

b) Surface water that has been polluted by septic system discharges is discharged to Surfrider Beach when the Malibu Lagoon breaches.

c) Septic System discharges are one source of nutrients and bacteria responsible for beach closures.

Divider A

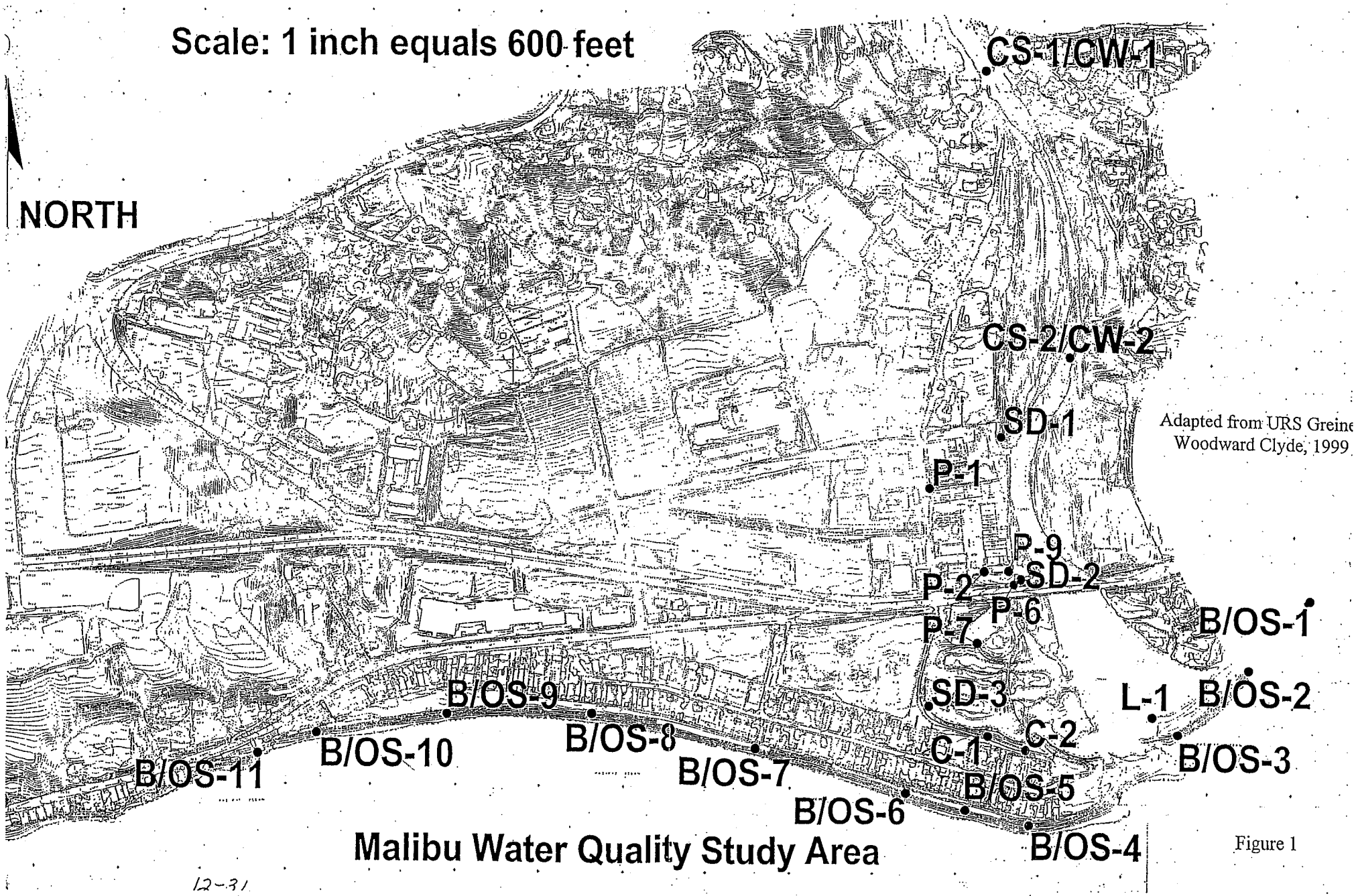

Malibu Water Quality Study Area

Figure 1

12-31

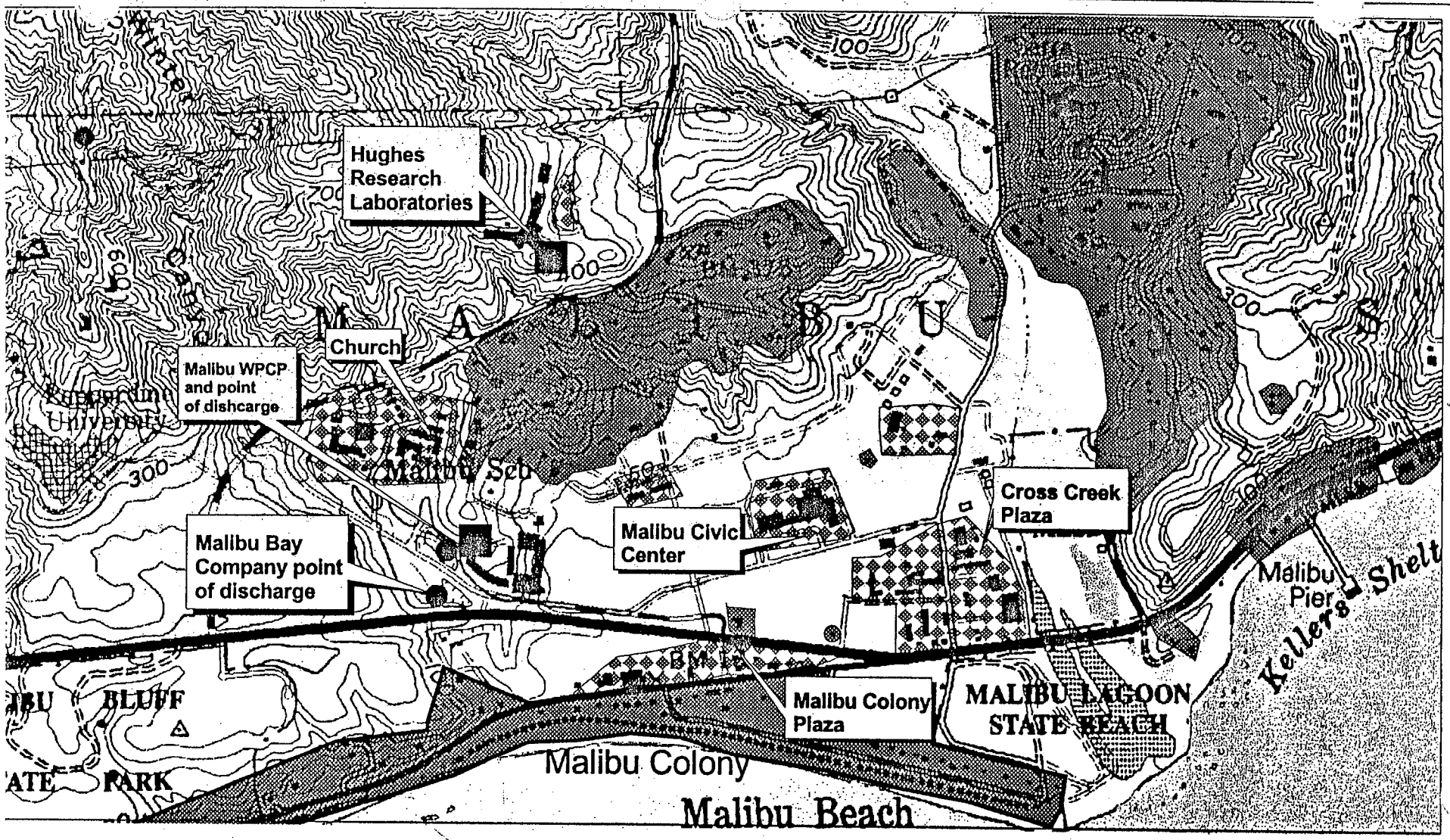

N
E
S

Predominantly individual on site systems (some commercial)

Commercial or cluster on site systems

Package Plant

0 0.5 Miles

Malibu Valley Area

Los Angeles Regional Water Quality Control Board

Divider B

Malibu Technical Investigation - Monitoring Well Sampling

		NH3	NO3	NO2	(Total Org N) TNT	MBAS	BOD	(Total Coliform) COL	(Fecal Coliform) CBC	(E. Coli) BEC	(Entero-cocci) CBE
Units		mg/L	mg/L	mg/L	mg/L	mg/L	mg/L	MPN/100mL	MPN/100mL	MPN/100mL	MPN/100mL
Minimum Detection Limit		0.05	0.2	0.03		0.025	1	2	2	2	2
Sampled	Location										
11-Nov-99	C-1	8.1	ND	ND	1.1	0.281	ND	130	130	130	300
11-Nov-99	C-2	0.4	ND	ND	ND	0.168	ND	4	<2	<2	23
11-Nov-99	P2	34.7	ND	ND	0.2	6.64	11	5000	23	23	2
11-Nov-99	P6	1.3	ND	ND	0.8	0.136	ND	9000	9000	9000	500
11-Nov-99	P7	0.2	ND	ND	ND	0.115	ND	8	<2	<2	<2
11-Nov-99	P9	0.5	ND	ND	0.4	0.066	ND	<2	<2	<2	4
15-Nov-99	C-2	0.2	ND	ND	0.3	0.156		<2	<2	<2	50
15-Nov-99	P2	16.7	ND	ND	1.6	2.50		130	13	13	2
15-Nov-99	P6	2.3	ND	ND	0.2	0.172		800	<2	<2	7
22-Nov-99	C-1	7.7	ND	ND	ND	0.176		<2	<2	<2	4
22-Nov-99	P2	12.4	ND	0.2	0.4	1.53		60	60	4	<2
22-Nov-99	P6	1.9	ND	ND	0.5	0.169		13	2	2	<2
22-Nov-99	P9	1.7	ND	ND	0.7	0.226		<2	<2	<2	<2
29-Nov-99	C-1	7.6	ND	ND	0.1	0.074		<2	<2	<2	13
29-Nov-99	C-2	0.05	ND	ND	0.5	0.056		<2	<2	<2	23
29-Nov-99	P2	9.3	ND	ND	0.9	0.251					
29-Nov-99	P6	2.0	ND	ND	0.7	0.026		<2	<2	<2	220
29-Nov-99	P7							200	40		
29-Nov-99	P9	2.6	ND	ND	ND	0.139		<2	<2	<2	23

Table 1

Malibu Technical Investigation - Storm Drain Sampling

Sampled	Location	NH3	NO3	NO2	(Total Org N) TNT	MBAS	BOD	(Total Coliform) COL	(Fecal Coliform) CBC	(E. Coli) BEC	(Entero-cocci) CBE	PO4	Ortho PO4	(Total Residual Chlorine) TRC
	Units	mg/L	mg/L	mg/L	mg/L	mg/L	mg/L	MPN/100mL	MPN/100mL	MPN/100mL	MPN/100mL	mg/L	mg/L	MPN/100mL
	Minimum Detection Limit	0.05	0.2	0.03		0.025	1	2	2	2	2	0.010	0.010	0.05
18-Aug-99	SD-1							2400	130	130	<2			
18-Aug-99	SD-2							40	12	12	<2			
18-Aug-99	SD-3					0.709		16000	16000	>16000	<2			
25-Aug-99	SD-1	0.4	ND	ND	0.2	0.082		500	23	23	4	0.20		
25-Aug-99	SD-2	0.8	ND	ND	0.1	0.063		>16000	16000	900	300	0.12		
25-Aug-99	SD-3	5.7	ND	ND	0.0	0.520		>16000	>16000	>16000	1600	1.70		
31-Aug-99	SD-1	0.1	ND	ND	0.8	0.124		3000	130	130	50	0.32		0.06
31-Aug-99	SD-2	5.4	ND	ND	3.1	1.49		>16000	>16000	>16000	16000	1.72		ND
31-Aug-99	SD-3	4.2	ND	ND	1.8	0.276		>16000	5000	5000	23	1.34		ND
07-Sep-99	SD-1	ND	0.2	ND	1.0	0.145		9000	1700	30	<2	0.16		ND
07-Sep-99	SD-2	ND	ND	ND	0.8	0.199		>16000	>16000	5000	<2	0.18		0.37
07-Sep-99	SD-3	2.3	ND	ND	1.6	0.336		16000	16000	9000	<2	1.37		ND
11-Nov-99	SD-1	ND	1.0	ND	0.4	0.159	ND	3000	500	500	240	0.23	1.36	
11-Nov-99	SD-2	3.4	0.19	0.092		0.485	20	>16000	>16000	>16000	130	1.13	1.28	
11-Nov-99	SD-3	4.2	0.2	ND	1.2	0.386		>16000	230	230	240	0.16	0.24	
15-Nov-99	SD-2	23.0	ND	0.3	18.2	0.735		>16000	>16000	16000	>1600	18.8	17.2	
15-Nov-99	SD-4	ND	0.8	ND	0.5	0.126		300	80	80	<2	ND	0.03	
22-Nov-99	SD-1													
22-Nov-99	SD-2	18.6	ND	0.1	3.7	2.74		>16000	>16000	>16000	900	7.89	7.89	
22-Nov-99	SD-4	0.7	0.1	0.06	1.3	0.287		16000	5000	5000	>1600	0.52	0.50	
29-Nov-99	SD-2	39.2	ND	ND	11.1	2.35		>160000	>160000	>16000	>1600	37.4	26.0	
29-Nov-99	SD-4	1.2	1.4	0.2	1.6	0.162		3000	1700	1700	500	0.33	0.32	

T 1
CONT.

Malibu Technical Investigation - Surface Water Sampling

Sampled	Location	NH3	NO3	NO2	(Total Org N) TNT	MBAS	BOD	(Total Coliform) COL	(Fecal Coliform) CBC	(E. Coli) BEC	(Entero-cocci) CBE	PO4	Ortho PO4	(Total Residual Chlorine) TRC
	Units	mg/L	mg/L	mg/L	mg/L	mg/L	mg/L	MPN/100mL	MPN/100mL	MPN/100mL	MPN/100mL	mg/L	mg/L	MPN/100mL
	Minimum Detection Limit	0.05	0.2	0.03		0.025	1	2	2	2	2	0.010	0.010	0.05
09-Aug-99	CH-C	0.3	ND	ND	0.6	0.114		<2	<2	<2		0.20		
09-Aug-99	CS-1	0.4	ND	ND	0.1	0.140		2400	70			0.59		
09-Aug-99	E-1	0.3	ND	ND	0.5	0.147		300	80			0.15		
25-Aug-99	CS-1	0.5	ND	ND	ND	0.080		6	2	<2	2	0.44		
25-Aug-99	E-1	0.7	ND	ND	0.0	0.133		5000	500	60	4	0.05		
31-Aug-99	CS-1	ND	ND	ND	0.3	0.074		230	30	30	50	0.40		
31-Aug-99	E-1	0.3	ND	ND	0.2	0.090		3000	110	70	8	0.16		0.39
31-Aug-99	LM-1	0.4	ND	ND	0.3	0.102		500	170	170	8	0.14		
31-Aug-99	R-1	ND	ND	ND	ND	0.066		80	4	4	50	0.03		
07-Sep-99	CS-1	ND	2.9	ND	0.4	0.103		9000	800	800	<2	0.41		
07-Sep-99	E-1	ND	ND	ND	0.7	0.104		3000	210	100	<2	0.06		
07-Sep-99	LM-1	0.1	ND	ND	0.7	0.125		3000	130	130	<2	0.11		
07-Sep-99	R-1	ND	ND	ND	0.2	0.084		50	17	17	<2	ND		
11-Nov-99	CC-1	ND	1.1	ND	0.2	ND	ND	240	240	240	<2	0.06	0.11	
11-Nov-99	CS-2	ND	2.5	ND	0.8	0.223	ND	80	30	30	30	0.54	0.64	
11-Nov-99	LM-1	0.4	ND	ND	0.2	0.038	6	800	500	500	17	0.09	0.134	
15-Nov-99	ACC	0.2	1.8	ND	0.1	0.163		1300	140	50	2	0.32	0.34	
15-Nov-99	ALV	ND	ND	ND	0.2	0.173		230	230	70	<2	0.06	0.09	
15-Nov-99	BCC	ND	2.3	ND	0.6	0.191		1100	80	30	<2	0.48	0.51	
15-Nov-99	BLV	ND	1.5	ND	0.2	0.296		80	80	230	23	0.11	0.10	
15-Nov-99	CC-1	ND	0.4	ND	0.2	0.115		800	280	110	2	0.04	0.08	
15-Nov-99	CH-A	3.5	ND	ND	0.7	0.258		5000	5000	2800	23	0.72	0.66	
15-Nov-99	CH-B	2.0	ND	ND	1.0	0.238		1400	220	300	23	0.59	0.61	
15-Nov-99	CH-C	2.0	ND	ND	0.5	0.264		1100	500	500	23	0.50	0.59	
15-Nov-99	E-1	ND	2.8	ND	0.5	0.157		2200	230	230	8	0.59	0.64	
15-Nov-99	LB	ND	ND	ND	0.1	0.356		230	130	330	13	0.03	ND	

TI CONT.

Malibu Technical Investigation - Surface Water Sampling

Sampled	Location	NH3	NO3	NO2	(Total Org N) TNT	MBAS	BOD	(Total Coliform) COL	(Fecal Coliform) CBC	(E. Coli) BEC	(Entero-cocci) CBE	PO4	Ortho PO4	(Total Residual Chlorine) TRC
Units		mg/L	mg/L	mg/L	mg/L	mg/L	mg/L	MPN/100mL	MPN/100mL	MPN/100mL	MPN/100mL	mg/L	mg/L	MPN/100mL
Minimum Detection Limit		0.05	0.2	0.03		0.025	1	2	2	2	2	0.010	0.010	0.05
15-Nov-99	LM-1	ND	2.6	ND	0.5	0.328		500	350	3000	8	0.43	0.55	
15-Nov-99	LV-1	ND	5.1	ND	0.5	0.310		500	300	500	23	0.15	0.19	
15-Nov-99	R-1	ND	ND	ND	ND	0.150		170	17	17	<2	0.13	0.03	
22-Nov-99	ACC	ND	1.9	ND	0.8	0.310		110	30	30	<2	0.85	0.92	
22-Nov-99	ALV	ND	ND	ND	0.4	0.120		1100	13	13	30	0.04	0.07	
22-Nov-99	BCC	ND	1.8	ND	0.8	0.375		230	30	30	30	0.87	0.89	
22-Nov-99	BLV	ND	1.6	ND	0.5	0.050		300	130	130	130	0.09	0.10	
22-Nov-99	CC-1	ND	0.3	ND	0.2	0.270		50	50	50	<2	0.10	0.08	
22-Nov-99	CH-A	0.9	1.4	ND	0.7	0.147		16000	500	500	240	0.44	0.46	
22-Nov-99	CH-B	ND	ND	ND	0.3	0.074		300	130	50	>1600	0.09	0.08	
22-Nov-99	CH-C	ND	ND	ND	0.4	0.122		230	80	22	50	0.05	0.07	
22-Nov-99	E-1	0.2	1.4	ND	0.7	0.084		3000	800	800	300	0.45	0.38	
22-Nov-99	LB	ND	1.1	ND	0.5	0.091		1300	2400	300	>1600	0.38	0.38	
22-Nov-99	LM-1	0.2	1.2	ND	0.1	0.129		2400	300	130	80	0.69	0.35	
22-Nov-99	LV-1	ND	5.0	ND	0.9	0.189		300	240	50	240	0.16	0.16	
22-Nov-99	R-1	ND	ND	ND	0.2	0.181		<2	<2	<2	<2	0.05	0.04	
29-Nov-99	ACC	0.4	1.5	ND	0..3	0.124		3500	600	600	130	0.27	0.24	
29-Nov-99	ALV	ND	ND	ND	0.2	0.199		230	40	40	4	0.06	0.09	
29-Nov-99	BCC	0.4	1.4	ND	0.1	0.162		5000	2300	2300	170	0.24	0.28	
29-Nov-99	BLV	ND	3.3	ND	0.5	0.195		16000	800	800	80	0.15	0.14	
29-Nov-99	CC-1	0.2	0.3	ND	0.1	0.170		5000	2300	2300	240	0.08	0.09	
29-Nov-99	CH-A	3.7	ND	ND	ND	0.267		9000	9000	9000	>1600	1.51	0.42	
29-Nov-99	CH-B	0.1	ND	ND	0.2	0.203		<2	<2	<2	<2	0.06	0.02	
29-Nov-99	CH-C	0.1	ND	ND	0.5	0.180		300	20	20	240	0.20	0.15	
29-Nov-99	E-1	ND	1.8	ND	0.4	0.168		2400	2400	2400	50	0.46	0.52	
29-Nov-99	LB	0.2	1.9	ND	0.1	0.128		5000	2300	2300	240	0.66	0.52	
29-Nov-99	LM-1	0.1	2.0	ND	0.1	0.163		2300	2300	2300	240	0.56	0.53	
29-Nov-99	LV-1	ND	5.2	ND	0.7	0.153		9000	1700	1700	170	0.09	0.11	
29-Nov-99	R-1	ND	ND	ND	0.3	0.163		130	80	80	8	ND	0.04	

T1 CONT.

Malibu Technical Investigation - Beach Subsurface Sampling

Sampled	Location	NH3	NO3	NO2	(Total Org N) TNT	MBAS	BOD	(Total Coliform) COL	(Fecal Coliform) CBC	(E. Coli) BEC	(Entero-coccl) CBE	PO4	Ortho PO4
	Units	mg/L	mg/L	mg/L	mg/L	mg/L	mg/L	MPN/100mL	MPN/100mL	MPN/100mL	MPN/100mL	mg/L	mg/L
	Minimum Detection Limit	0.05	0.2	0.03		0.025	1	2	2	2	2	0.010	0.010
09-Aug-99	B-02	0.2	0.2	ND	0.3	0.181		<2	<2			0.12	
09-Aug-99	B-07	0.3	0.1	ND	ND	0.043		80	80			ND	
09-Aug-99	B-09	0.2	1.5	ND	0.3	0.106		<2	<2			0.02	
18-Aug-99	B-0	0.2	5.0	ND	0.3	0.060		4	4	4	<2		
18-Aug-99	B-01	0.1	0.3	ND	0.2	0.106		<2	<2	<2	<2		
18-Aug-99	B-02	0.1	0.2	ND	0.3	0.093		<2	<2	<2	<2		
18-Aug-99	B-03	0.2	0.4	ND	ND	0.171		<2	<2	<2	<2		
18-Aug-99	B-04	ND	ND	ND	0.3	0.120		<2	<2	<2	<2		
18-Aug-99	B-05	0.06	ND	ND	0.1	0.165		<2	<2	<2	<2		
25-Aug-99	B-01	0.3	0.3	ND	0.4	0.037		<2	<2	<2	6	0.06	
25-Aug-99	B-02	0.2	0.1	0.1	0.4	0.138		<2	<2	<2	<2	0.23	
25-Aug-99	B-03	ND	ND	ND	0.3	0.084		<2	<2	<2	<2	0.12	
25-Aug-99	B-04	0.1	0.6	ND	0.2	0.043		<2	<2	<2	<2	0.02	
25-Aug-99	B-05	ND	ND	ND	0.2	0.087		<2	<2	<2	4	0.12	
25-Aug-99	B-06	ND	ND	ND	0.4	0.077		<2	<2	<2	<2	0.06	
25-Aug-99	B-07	ND	ND	ND	0.2	0.194		<2	<2	<2	<2	0.05	
25-Aug-99	B-08	0.5	ND	ND	ND	0.195		<2	<2	<2	<2	0.03	
25-Aug-99	B-09	0.5	0.2	ND	ND	0.190		<2	<2	<2	15	0.03	
25-Aug-99	B-10	ND	ND	ND	0.2	0.133		<2	<2	<2	<2	0.03	
25-Aug-99	B-11	0.1	ND	ND	0.1	0.057		<2	<2	<2	<2	0.05	
31-Aug-99	B-01	0.8	ND	ND	0.0	ND		<2	<2	<2	<2	0.08	
31-Aug-99	B-02	ND	ND	ND	0.2	0.145		<2	<2	<2	<2	0.11	
31-Aug-99	B-03	ND	0.5	ND	0.4	0.158		<2	<2	<2	<2	0.11	
31-Aug-99	B-04	ND	0.3	ND	0.1	0.151		<2	<2	<2	<2	0.05	
31-Aug-99	B-05	0.06	0.4	ND	0.1			<2	<2	<2	2		
31-Aug-99	B-06	ND	ND	ND	0.2			<2	<2	<2	<2		
31-Aug-99	B-07	0.9	ND	ND	ND			<2	<2	<2	<2		
31-Aug-99	B-08	0.4	0.2	ND	ND			<2	<2	<2	<2		

T1 CONT.

Malibu Technical Investigation - Beach Subsurface Sampling

Sampled	Location	NH3	NO3	NO2	(Total Org N) TNT	MBAS	BOD	(Total Coliform) COL	(Fecal Coliform) CBC	(E. Coli) BEC	(Entero-cocci) CBE	PO4	Ortho PO4
	Units	mg/L	mg/L	mg/L	mg/L	mg/L	mg/L	MPN/100mL	MPN/100mL	MPN/100mL	MPN/100mL	mg/L	mg/L
	Minimum Detection Limit	0.05	0.2	0.03		0.025	1	2	2	2	2	0.010	0.010
31-Aug-99	B-09	0.5	ND	ND	ND	0.059		<2	<2	<2	<2	0.06	
31-Aug-99	B-10	0.5	2.1	0.1	0.2	0.173		<2	<2	<2	<2	0.20	
31-Aug-99	B-11	0.1	ND	ND	ND	0.091		<2	<2	<2	<2	0.06	
07-Sep-99	B-01	ND	0.1	ND	0.07	0.254		<2	<2	<2	<2	0.07	
07-Sep-99	B-02	0.2	0.4	ND	0.2	0.438		<2	<2	<2	<2	0.08	
07-Sep-99	B-03	ND	ND	ND	0.1	0.409						0.06	
07-Sep-99	B-04	0.4	0.5	ND	ND	0.408		<2	<2	<2	<2	0.06	
07-Sep-99	B-05	0.4	ND	ND	ND	0.299		<2	<2	<2	<2	0.04	
07-Sep-99	B-06	0.2	ND	ND	ND	0.179		<2	<2	<2	<2	0.05	
07-Sep-99	B-07	0.2	ND	ND	ND	0.121		<2	<2	<2	<2	0.02	
07-Sep-99	B-08	ND	ND	ND	0.1	0.093		<2	<2	<2	<2	0.03	
07-Sep-99	B-09	ND	ND	ND	0.1	0.058		<2	<2	<2	<2	0.06	
07-Sep-99	B-10	ND	1.5	ND	0.2	0.044		<2	<2	<2	<2	0.15	
07-Sep-99	B-11	0.4	0.4	ND	ND	ND		<2	<2	<2	<2	0.08	
11-Nov-99	B-01	ND	3.4	ND	ND	ND		<2	<2	<2	2	0.07	0.049
11-Nov-99	B-03	ND	1.2	ND	0.4	0.080		4	4	4	8	0.10	0.15
11-Nov-99	B-04	ND	ND	ND	ND	0.046		<2	<2	<2	<2	0.05	0.031
15-Nov-99	B-03	ND	ND	ND	0.3	0.363		23	13	30	2	0.02	0.05
22-Nov-99	B-03	ND	ND	ND	0.2	ND		8	8	8	11	0.13	0.13
22-Nov-99	B-10	0.1	ND	ND	0.1	ND		<2	<2	<2	13	0.06	0.02
22-Nov-99	B-11	ND	ND	ND	0.4	0.072		3000	800	800	240	0.46	0.04
29-Nov-99	B-02	ND	ND	ND		0.117		<2	<2	<2	<2	0.30	0.07
29-Nov-99	B-04	ND	0.2	ND	ND	0.111		<2	<2	<2	23	0.03	0.05
29-Nov-99	B-11	0.1	ND	ND	0.3	0.136		2300	800	800	80	ND	0.02

T 1
CONT.

Malibu Technical Investigation - Beach Surf Sampling

Sampled	Location	NH3	NO3	NO2	(Total Org N) TNT	MBAS	BOD	(Total Coliform) COL	(Fecal Coliform) CBC	(E. Coli) BEC	(Entero-cocci) CBE	PO4	Ortho PO4
	Units	mg/L	mg/L	mg/L	mg/L	mg/L	mg/L	MPN/100mL	MPN/100mL	MPN/100mL	MPN/100mL	mg/L	mg/L
	Minimum Detection Limit	0.05	0.2	0.03		0.025	1	2	2	2	2	0.010	0.010
31-Aug-99	OS-10	0.6	ND	ND	ND	0.155		<2	<2	<2	<2	0.01	
31-Aug-99	OS-11	0.1	ND	ND	ND	0.114		<2	<2	<2	2	ND	
07-Sep-99	OS-01	ND	ND	ND	0.1	0.332		<2	<2	<2	<2	0.04	
07-Sep-99	OS-02	0.4	ND	ND	ND	0.334		<2	<2	<2	<2	0.02	
07-Sep-99	OS-03	ND	ND	ND	0.1	0.423		<2	<2	<2	<2	0.02	
07-Sep-99	OS-04	0.3	ND	ND	ND	0.253		<2	<2	<2	<2	ND	
07-Sep-99	OS-05	0.4	ND	ND	ND	0.083		<2	2	2	<2	ND	
07-Sep-99	OS-06	0.2	ND	ND	ND	0.218		<2	<2	<2	<2	ND	
07-Sep-99	OS-07	0.4	ND	ND	ND	0.100		<2	2	2	<2	ND	
07-Sep-99	OS-08	ND	ND	ND	0.05	0.095		<2	2	2	<2	ND	
07-Sep-99	OS-09	0.1	ND	ND	0.05	0.083		4	4	4	<2	ND	
07-Sep-99	OS-10	ND	ND	ND	0.1	0.062		4	4	<2	<2	ND	
07-Sep-99	OS-11	ND	ND	ND	0.1	0.089		4	4	4	<2	0.02	
15-Nov-99	OS-03	ND	ND	ND	ND	0.168		1100	170	60	2	0.03	0.04
22-Nov-99	OS-03	0.1	0.4	ND	ND	0.038		700	700	700	80	0.15	0.15
22-Nov-99	OS-10	0.3	ND	ND	ND	0.085		14	14	14	23	ND	ND
22-Nov-99	OS-11	0.1	ND	ND	ND	ND		<2	2	2	8	0.04	0.01
29-Nov-99	OS-02	ND	ND	ND		0.049		220	170	170	50	ND	0.02
29-Nov-99	OS-04	ND	ND	ND	ND	0.130		<2	<2	<2	2	ND	0.01
29-Nov-99	OS-11	ND	ND	ND		0.109		<2	<2	<2	<2	ND	ND

12-40

T1 CONT.

Malibu Technical Investigation - Beach Surf Sampling

Sampled	Location	NH3	NO3	NO2	(Total Org N) TNT	MBAS	BOD	(Total Coliform) COL	(Fecal Coliform) CBC	(E. Coli) BEC	(Entero-cocci) CBE	PO4	Ortho PO4
	Units	mg/L	mg/L	mg/L	mg/L	mg/L	mg/L	MPN/100mL	MPN/100mL	MPN/100mL	MPN/100mL	mg/L	mg/L
	Minimum Detection Limit	0.05	0.2	0.03		0.025	1	2	2	2	2	0.010	0.010
18-Aug-99	OS-0	0.1	ND	ND	0.2	0.057		<2	<2	<2	<2		
18-Aug-99	OS-01	0.1	ND	ND	0.1	0.123		<2	2	2	<2		
18-Aug-99	OS-02	0.1	ND	ND	0.2	0.096		11	11	8	<2		
18-Aug-99	OS-03	0.1	ND	ND	0.05	0.111		<2	<2	<2	<2		
18-Aug-99	OS-04	ND	ND	ND	0.2	0.082		<2	<2	<2	<2		
18-Aug-99	OS-05	ND	ND	ND	0.1	0.222		<2	<2	<2	<2		
25-Aug-99	OS-01	0.8	0.3	ND	ND	0.128		<2	<2	<2	<2	0.03	
25-Aug-99	OS-02	ND	ND	ND	0.2	0.112		<2	2	2	<2	0.02	
25-Aug-99	OS-03	ND	ND	ND	0.2	0.079		<2	2	2	<2	0.07	
25-Aug-99	OS-04	0.3	ND	ND	ND	0.039		<2	2	<2	13	ND	
25-Aug-99	OS-05	ND	ND	ND	0.2	0.137		<2	<2	<2	<2	0.01	
25-Aug-99	OS-06	ND	ND	ND	0.2	0.084		<2	<2	<2	13	ND	
25-Aug-99	OS-07	0.4	ND	ND	ND	0.071		<2	2	2	<2	ND	
25-Aug-99	OS-08	0.8	ND	ND	ND	0.065		<2	<2	<2	<2	0.01	
25-Aug-99	OS-09	0.4	ND	ND	ND	0.106		11	11	11	22	0.13	
25-Aug-99	OS-10	ND	ND	ND	0.2	0.098		4	4	4	30	ND	
25-Aug-99	OS-11	ND	ND	ND	0.2	0.146		<2	2	2	4	0.11	
31-Aug-99	OS-01	0.3	ND	ND	0.0	0.183		14	14	14	<2	0.03	
31-Aug-99	OS-02	0.06	ND	ND	ND	0.087		13	13	13	2	0.05	
31-Aug-99	OS-03	0.4	ND	ND	0.0	0.197		8	8	8	2	0.03	
31-Aug-99	OS-04	ND	ND	ND	ND	0.078		<2	<2	<2	<2	0.02	
31-Aug-99	OS-05	0.1	ND	ND	ND			<2	<2	<2	<2		
31-Aug-99	OS-06	ND	ND	ND	ND			<2	<2	<2	<2		
31-Aug-99	OS-07	0.1	ND	ND	ND			<2	<2	<2	2		
31-Aug-99	OS-08	0.3	ND	ND	ND	0.136		<2	<2	<2	<2	ND	
31-Aug-99	OS-09	0.4	ND	ND	ND	0.150		<2	<2	<2	<2	0.02	

12-39

T1 CONT.

LABORATORY RESULTS
AUGUST 2, 1999 SAMPLING EVENT

	Ammonia-N (mg/L)	Nitrite-N (mg/L)	Nitrate-N (mg/L)	Total Kjeldehl-N (mg/L)	MBAS (mg/L)	BOD (mg/L)	Total Coliforms (mpn/100ml)	Fecal Coliforms (mpn/100ml)	E. Coli (mpn/100ml)	Enterococci (mpn/100ml)
P-1	ND[1]	ND	12	ND	ND	2	<2	<2	<2	8
P-2	26.6	ND	ND	28	4	13	>1,600	>1,600	1,600	4
P-6	1.1	ND	ND	2.2	ND	2	<2	<2	<2	<2
P-7	ND	ND	ND	1	ND	1	<2	<2	<2	<2
P-9	0.4	ND	3	1.3	ND	3	<2	<2	<2	4
C-1	ND	ND	ND	0.8	ND	4	<2	<2	<2	<2
C-2	11	ND	ND	11.9	0.3	9	30	30	30	130
SD-1	0.2	0.02	2	1.1	ND	8	>1,600	>1,600	30	170
SD-2	ND	ND	ND	1.4	ND	6	>1,600	34	12	13
SD-3	0.3	0.02	ND	3.5	0.3	18	>1,600	900	300	1,600
CS-1/CW-1	ND	ND	ND	1.1	ND	4	11	8	8	8
CS-2/CW-2	--[2]	--	--	--	--	--	--	--	--	--
L-1	ND	ND	ND	2.2	ND	6	50	50	30	4
B-1	ND	ND	0.2	3.1	ND	7	<2	<2	<2	2
OS-1	ND	ND	ND	1	ND	7	2	2	2	2
B-2	ND	ND	ND	2.4	ND	11	<2	<2	<2	4
OS-2	ND	ND	ND	0.8	ND	8	11	11	11	<2
B-3	0.3	ND	ND	2.5	ND	14	110	110	110	13
OS-3	ND	ND	ND	0.6	ND	7	2	2	2	2
B-4	ND	ND	0.3	0.8	ND	11	15	<2	<2	80
OS-4	ND	ND	ND	0.6	ND	7	<2	<2	<2	4
B-5	ND	ND	ND	ND	ND	8	<2	<2	<2	<2
OS-5	ND	ND	ND	0.7	ND	6	2	<2	<2	2
B-6	ND	ND	ND	5.6	ND	11	<2	<2	<2	<2
OS-6	ND	ND	ND	0.6	ND	8	500	500	9	23
B-7	ND	ND	ND	1	ND	12	<2	<2	<2	<2
OS-7	ND	ND	ND	ND	ND	9	<2	<2	<2	<2
B-8	ND	ND	0.6	0.7	ND	13	<2	<2	<2	<2
OS-8	ND	ND	ND	0.6	ND	3	<2	<2	<2	8
B-9	ND	ND	0.5	0.8	ND	13	<2	<2	<2	<2
OS-9	ND	ND	ND	0.8	ND	3	<2	<2	<2	<2
B-10	ND	ND	2.6	0.8	ND	15	13	<2	<2	<2
OS-10	ND	ND	ND	0.7	ND	3	<2	<2	<2	<2
B-11	ND	ND	0.2	1.1	ND	6	<2	<2	<2	<2
OS-11	ND	ND	ND	0.7	ND	4	2	<2	<2	<2

1. Not Detected. See Laboratory Report for detection limit.
2. Not Sampled

Adapted from URS Greiner Woodward Clyde, 1999

Table 2

LABORATORY RESULTS
AUGUST 9, 1999

	Ammonia-N (mg/L)	Nitrite-N (mg/L)	Nitrate-N (mg/L)	Total Kjeldehl-N (mg/L)	MBAS (mg/L)	BOD (mg/L)	Total Coliforms (mpn/100ml)	Fecal Coliforms (mpn/100ml)	E. Coli (mpn/100ml)	Enterococci (mpn/100ml)
P-1	ND[1]	ND	12	ND	ND	ND	<2	<2	<2	<2
P-2	27.9	ND	ND	30.7	4	9	1,600	900	900	8
P-6	0.6	ND	ND	2.2	ND	2	<2	<2	<2	<2
P-7	ND	ND	ND	1.1	ND	2	17	<2	<2	<2
P-9	ND	ND	2.1	0.8	ND	2	2	<2	<2	<2
C-1	ND	ND	ND	1.4	ND	2	<2	<2	<2	<2
C-2	9.6	ND	ND	10.6	0.2	7	8	<2	<2	23
SD-1	ND	0.04	ND	3.2	0.2	2	80	8	8	13
SD-2	ND	ND	ND	2.1	ND	5	1,600	220	140	170
SD-3	ND	0.02	1.8	0.7	ND	4	500	22	22	6
CS-1/CW-1	ND	ND	ND	1.3	ND	3	900	22	22	130
CS-2/CW-2	ND	0.06	1.1	1	ND	3	900	70	26	30
L-1	ND	ND	ND	2	ND	ND	17	17	7	4
B-1	ND	ND	ND	3.1	ND	ND	<2	<2	<2	<2
OS-1	ND	ND	ND	0.6	ND	ND	<2	<2	<2	2
B-2	ND (0.2)[2]	ND (ND)	ND (ND)	1.3	ND (0.181)	2	<2 (<20)	<2 (<20)	<2	<2
OS-2	ND	ND	ND	ND	ND	ND	<2	<2	<2	<2
B-3	ND	ND	ND	1.8	ND	3	<2	<2	<2	<2
OS-3	ND	ND	ND	ND	ND	ND	<2	<2	<2	<2
B-4	ND	ND	0.3	0.8	ND	ND	2	2	2	<2
OS-4	ND	ND	ND	ND	ND	ND	1,600	1,600	1,600	>1,600
B-5	ND	ND	ND	0.6	ND	ND	2	<2	<2	<2
OS-5	ND	ND	ND	0.7	ND	ND	2	2	2	50
B-6	ND	ND	ND	3.6	ND	3	<2	<2	<2	2
OS-6	ND	ND	ND	1	ND	ND	<2	<2	<2	<2
B-7	ND (0.3)	ND (ND)	ND (ND)	0.6	ND (0.043)	ND	50 (<20)	21 (<20)	21	23
OS-7	ND	ND	ND	0.6	ND	ND	2	2	2	<2
B-8	ND	ND	ND	0.6	ND	ND	<2	<2	<2	<2
OS-8	ND	ND	ND	1.4	ND	ND	<2	<2	<2	<2
B-9	ND (0.2)	ND (ND)	0.3 (1.5)	0.8	ND (0.106)	2	<2 (<20)	<2 (<20)	<2	2
OS-9	ND	ND	ND	ND	ND	ND	<2	<2	<2	<2
B-10	ND	ND	0.6	3.4	ND	2	2	2	2	<2
OS-10	ND	ND	ND	0.6	ND	ND	<2	<2	<2	<2
B-11	ND	ND	0.7	2.1	ND	3	<2	<2	<2	4
OS-11	ND	ND	ND	0.6	ND	ND	>1,600	240	240	>1,600
SP-1	NA[3]	NA	NA	NA	NA	NA	2	NA	2	NA
SP-2	NA	NA	NA	NA	NA	NA	>1,600	NA	23	NA

1. Not Detected. See Laboratory Report for detection limit.
2. CRWQCB split sample results shown in brackets
3. Not Analyzed

T2
CONT.

Adapted from URS Greiner Woodward Clyde, 1999

LABORATORY RESULTS
NOVEMBER 11, 1999 SAMPLING EVENT

	Ammonia-N (mg/L)	Nitrite-N (mg/L)	Nitrate-N (mg/L)	Total Kjeldehl-N (mg/L)	MBAS (mg/L)	BOD (mg/L)	Total Coliforms (mpn/100ml)	Fecal Coliforms (mpn/100ml)	E. Coli (mpn/100ml)	Enterococci (mpn/100ml)
P-1	--[1]	--	--	--	--	--	--	--	--	--
P-2	29.4 (37.4)[2]	0.01 (ND)	ND (ND)	35.6	1.9 (6.64)	11	5000 (2,400)	23 (23)	23 (23)	<2 (<2)
P-6	ND[3] (1.3)	0.01 (ND)	ND (ND)	2	ND (0.136)	ND	9,000 (50)	9,000 (<2)	9,000 (<2)	500 (<2)
P-7	ND (0.2)	ND (ND)	ND (ND)	0.6	ND (0.115)	ND	8 (4)	<2 (<2)	<2 (<2)	<2 (8)
P-9	ND (0.5)	ND (ND)	ND (ND)	1.1	ND (0.066)	ND	<2 (4)	<2 (<2)	<2 (<2)	4 (2)
C-1	6.6	ND	ND	11.6	ND (0.281)	ND	130 (50)	130 (30)	130 (30)	300 (170)
C-2	ND (0.4)	ND (ND)	ND (ND)	0.6	ND (0.168)	ND	4 (80)	<2 (<2)	<2 (<2)	23 (13)
SD-1	ND (ND)	0.014 (ND)	0.82 (1.0)	1.1	ND (0.159)	ND	3,000 (>16,000)	500 (230)	500 (230)	240 (900)
SD-2	3.4	0.092	0.19	7.6	0.4 (0.485)	20	16,000 (>16,000	16,000 (>16,000)	6,000 (>16,00	130 (>16,000)
SD-3	ND (4.2)	0.03 (ND)	ND (0.2)	2	0.1	4	>16,000	230	230	240
CS-1/CW-1	ND	0.019	2.6	0.9	ND	ND	240	240	240	<2
CS-2/CW-2	ND (ND)	0.021 (ND)	2.5 (2.5)	1.4	ND (0.223)	ND	80 (300)	30 (170)	30 (170)	30 (80)
L-1	ND	ND	ND	1.4	0.1	6	800	500	500	17
B-1	ND (ND)	ND (ND)	3.4 (3.4)	0.8	0.1 (ND)	ND	<2 (<2)	<2 (<2)	<2 (<2)	7 (2)
OS-1	ND	ND	ND	0.6	ND	1	800	230	230	23
B-2	ND	ND	0.35	0.8	ND	1	11	11	11	14
OS-2	ND	ND	ND	0.6	ND	1	800	130	130	80
B-3	ND (ND)	0.026 (ND)	1.1 (1.2)	1.1	ND (0.080)	1	23 (4)	13 (4)	13 (4)	4 (8)
OS-3	ND	0.012	ND	0.8	0.1	3	800	170	170	130
B-4	ND (ND)	ND (ND)	ND (ND)	ND	ND (0.046)	ND	2 (<2)	2 (<2)	2 (<2)	<2 (<2)
OS-4	ND	ND	ND	ND	ND	ND	2	2	2	<2
B-5	--	--	--	--	--	--	--	--	--	--
OS-5	--	--	--	--	--	--	--	--	--	--
B-6	--	--	--	--	--	--	--	--	--	--
OS-6	--	--	--	--	--	--	--	--	--	--
B-7	--	--	--	--	--	--	--	--	--	--
OS-7	--	--	--	--	--	--	--	--	--	--
B-8	--	--	--	--	--	--	--	--	--	--
OS-8	--	--	--	--	--	--	--	--	--	--
B-9	--	--	--	--	--	--	--	--	--	--
OS-9	--	--	--	--	--	--	--	--	--	--
B-10	--	--	--	--	--	--	--	--	--	--
OS-10	--	--	--	--	--	--	--	--	--	--
B-11	--	--	--	--	--	--	--	--	--	--
OS-11	--	--	--	--	--	--	--	--	--	--

1. Not Sampled
2. CRWQCB split sample results shown in brackets
3. Not Detected. See Laboratory Report for detection limit.

T2
CONT.

Adapted from URS Greine
Woodward Clyde, 1999

LABORATORY RESULTS
NOVEMBER 15, 1999 SAMPLING EVENT

	Ammonia-N (mg/L)	Nitrite-N (mg/L)	Nitrate-N (mg/L)	Total Kjeldehl-N (mg/L)	MBAS (mg/L)	BOD (mg/L)	Total Coliforms (mpn/100ml)	Fecal Coliforms (mpn/100ml)	E. Coli (mpn/100ml)	Enterococci (mpn/100ml)
P-1	ND[1]	0.014	6.4	0.8	ND	ND	<2	<2	<2	<2
P-2	17.9	ND	ND	18.2	2	2	110 (130)	27 (13)	27 (13)	4 (2)
P-6	1.2	0.027	0.14	1.4	ND	1	80 (800)	<2 (<2)	<2 (<2)	4 (7)
P-7	ND	ND	ND	2.5	ND	ND	2	<2	<2	<2
P-9	1.7	ND	ND	1.7	0.2	ND	<2	<2	<2	<2
C-1	7.9	0.012	ND	8.1	ND	1	50	4	4	240
C-2	0.1	ND	ND	2	ND	ND	<2 (<2)	<2 (<2)	<2 (<2)	4 (50)
SD-1	0.1	0.01	1.2	1.4	ND	ND	>16,000	80	80	7
SD-2	23.4	ND	ND	25.2	0.1	70	>16,000 (>16,000)	>16,000 (>16,000)	>16,000 (>16,000)	240 (>1,600)
SD-3	3	0.028	ND	7.3	0.2	2	>16,000	500	500	13
CS-1/CW-1	ND	0.024	3.3	1.1	ND	ND	170	23	23	80
CS-2/CW-2	ND	0.028	3.3	1.1	ND	ND	900	170	170	30
L-1	0.4	0.052	1.1	1.4	ND	2	2,400	2,400	2,400	80
B-1	1.3	ND	12	2	ND	ND	4	<2	<2	12
OS-1	ND	ND	ND	2.3	ND	ND	27	13	13	<2
B-2	ND	ND	ND	1.4	ND	ND	<2	<2	<2	<2
OS-2	ND	ND	ND	0.8	0.1	ND	220	27	27	2
B-3	ND (ND)[2]	ND (ND)	ND (ND)	ND	0.2 (0.363)	1	<2 (23)	<2 (13)	<2 (30)	<2 (2)
OS-3	ND (ND)	ND (ND)	ND (ND)	0.8	ND (0.168)	ND	230 (1,100)	130 (170)	130 (60)	23 (2)
B-4	ND	ND	0.12	1.1	ND	ND	23	2	2	<2
OS-4	ND	ND	ND	0.6	ND	ND	<2	<2	<2	<2
B-5	--[3]	--	--	--	--	--	--	--	--	--
OS-5	--	--	--	--	--	--	--	--	--	--
B-6	--	--	--	--	--	--	--	--	--	--
OS-6	--	--	--	--	--	--	--	--	--	--
B-7	--	--	--	--	--	--	--	--	--	--
OS-7	--	--	--	--	--	--	--	--	--	--
B-8	--	--	--	--	--	--	--	--	--	--
OS-8	--	--	--	--	--	--	--	--	--	--
B-9	--	--	--	--	--	--	--	--	--	--
OS-9	--	--	--	--	--	--	--	--	--	--
B-10	--	--	--	--	--	--	--	--	--	--
OS-10	--	--	--	--	--	--	--	--	--	--
B-11	--	--	--	--	--	--	--	--	--	--
OS-11	--	--	--	--	--	--	--	--	--	--

1. Not Detected. See Laboratory Report for detection limit.
2. CRWQCB split sample results shown in brackets
3. Not Sampled

T 2
CONT.

Adapted from URS Greine
Woodward Clyde, 1999

LABORATORY RESULTS
NOVEMBER 22, 1999 SAMPLING EVENT

	Ammonia-N (mg/L)	Nitrite-N (mg/L)	Nitrate-N (mg/L)	Total Kjeldehl-N (mg/L)	MBAS (mg/L)	BOD (mg/L)	Total Coliforms (mpn/100ml)	Fecal Coliforms (mpn/100ml)	E. Coli (mpn/100ml)	Enterococci (mpn/100ml)
P-1	--[1]	--	--	--	--	--	--	--	--	--
P-2	13	0.22	0.22	14	0.9	2	800 (60)[3]	800 (60)	<2 (4)	13 (<2)
P-6	0.6	0.058	0.1	1.4	ND	2	17 (13)	17 (2)	<2 (2)	4 (<2)
P-7	ND[2]	0.014	ND	0.8	ND	ND	<2	<2	<2	2
P-9	2	0.011	0.12	2.5	0.1	ND	<2 (<2)	<2 (<2)	<2 (<2)	<2 (<2)
C-1	7	0.011	ND	8	ND	ND	23 (<2)	<2 (<2)	<2 (<2)	<2 (4)
C-2	0.2	ND	ND	0.8	ND	ND	<2	<2	<2	2
SD-1	ND	ND	0.94	ND	0.2	ND	9000	70	70	240
SD-2	20	ND	0.11	46	0.2	146	>16,000 (>16,000)	>16,000 (>16,000)	>16,000 (>16,000)	>1,600 (900)
SD-3	3.6	0.052	ND	7.3	0.8	20	>16,000	>2,400	>2,400	7
CS-1/CW-1	ND	ND	1.9	0.8	ND	ND	230	80	80	23
CS-2/CW-2	ND	0.012	1.8	ND	ND	ND	700	170	130	240
L-1	ND	0.018	0.68	ND	ND	ND	900	900	800	13
B-1	ND	ND	0.57	2.4	ND	ND	<2	<2	<2	<2
OS-1	ND	ND	ND	0.8	ND	4	170	170	170	130
B-2	ND	ND	ND	ND	ND	ND	<2	<2	<2	<2
OS-2	ND	ND	ND	ND	ND	ND	130	130	130	18
B-3	ND	ND	0.13	ND	ND	ND	23	23	23	240
OS-3	ND	ND	0.37	ND	ND	ND	300	300	300	240
B-4	ND	ND	0.1	ND	ND	1	80	6	<2	8
OS-4	ND	ND	0.11	2.5	0.1	24	800	800	800	13
B-5	--	--	--	--	--	--	--	--	--	--
OS-5	--	--	--	--	--	--	--	--	--	--
B-6	--	--	--	--	--	--	--	--	--	--
OS-6	--	--	--	--	--	--	--	--	--	--
B-7	--	--	--	--	--	--	--	--	--	--
OS-7	--	--	--	--	--	--	--	--	--	--
B-8	--	--	--	--	--	--	--	--	--	--
OS-8	--	--	--	--	--	--	--	--	--	--
B-9	ND	ND	ND	ND	ND	ND	<2	<2	<2	2
OS-9	ND	ND	ND	ND	ND	ND	42	4	4	<2
B-10	0.1	ND	ND	0.5	ND	ND	<2 (<2)	<2 (<2)	<2 (<2)	4 (13)
OS-10	ND	ND	0.11	ND	ND	ND	70 (41)	50 (14)	50 (14)	23 (23)
B-11	ND	ND	ND	ND	ND	ND	3,000 (3,000)	2,400 (800)	2,400 (800)	300 (240)
OS-11	ND	ND	ND	ND	ND	ND	13 (2)	13 (2)	13 (2)	80 (8)

1. Not Sampled
2. Not Detected. See Laboratory Report for detection limit.
3. CRWQCB split sample results shown in brackets

T2
CONT.

Adapted from URS Greiner
Woodward Clyde, 1999

LABORATORY RESULTS
NOVEMBER 29, 1999 SAMPLING EVENT

	Ammonia-N (mg/L)	Nitrite-N (mg/L)	Nitrate-N (mg/L)	Total Kjeldehl-N (mg/L)	MBAS (mg/L)	BOD (mg/L)	Total Coliforms (mpn/100ml)	Fecal Coliforms (mpn/100ml)	E. Coli (mpn/100ml)	Enterococci (mpn/100ml)
P-1	ND[1]	0.014	3.1	ND	ND	ND	<2	<2	<2	<2
P-2	8.5	0.059	ND	9.5	1.2	1	<2	<2	<2	30
P-6	1.6	0.046	ND	2	0.1	5	23[2] (<2)[4]	<2 (<2)	<2 (<2)	100 (220)
P-7	ND	0.018	ND	ND	0.1	ND	<2	<2	<2	23
P-9	2.2	ND	ND	3.4	0.4	1	4 (<2)	<2 (<2)	<2 (<2)	50 (23)
C-1	6.8	ND	ND	7	0.1	ND	<2 (<2)	<2 (<2)	<2 (<2)	13 (13)
C-2	0.3	ND	ND	0.6	ND	ND	<2 (<2)	<2 (<2)	<2 (<2)	23 (23)
SD-1	ND	ND	0.73	0.8	ND	ND	16,000	300	300	500
SD-2	27.6	ND	ND	50	0.1	536	16,000 (>16,000	1,300 (>16,000)	,300 (>16,000	>1,600 (>1,600)
SD-3	4.6	ND	ND	7	0.8	3	16,000	800	800	900
CS-1/CW-1	ND	0.013	1.4	ND	ND	ND	500	500	500	17
CS-2/CW-2	ND	0.01	1.6	ND	ND	ND	2,300	300	300	30
L-1	ND	0.021	0.98	0.8	ND	ND	110	110	110	>1,600
B-1	ND	ND	ND	ND	0.4	ND	<2	<2	<2	240
OS-1	ND	ND	ND	ND	ND	ND	110	110	110	2
B-2	ND	ND	ND	ND	0.2	ND	<2	<2	<2	<2
OS-2	ND	ND	ND	ND	ND	ND	170	20	20	20
B-3	ND	ND	ND	ND	ND	ND	800	140	140	23
OS-3	ND	ND	0.16	ND	ND	ND	2,300	2,300	2,300	70
B-4	ND	ND	ND	ND	ND	ND	<2	<2	<2	4
OS-4	ND	ND	ND	ND	ND	ND	2 (<2)	2 (<2)	2 (<2)	<2 (2)
B-5	--[3]	--	--	--	--	--	--	--	--	--
OS-5	--	--	--	--	--	--	--	--	--	--
B-6	--	--	--	--	--	--	--	--	--	--
OS-6	--	--	--	--	--	--	--	--	--	--
B-7	--	--	--	--	--	--	--	--	--	--
OS-7	--	--	--	--	--	--	--	--	--	--
B-8	--	--	--	--	--	--	--	--	--	--
OS-8	--	--	--	--	--	--	--	--	--	--
B-9	ND	ND	ND	ND	ND	ND	50	50	50	4
OS-9	ND	ND	ND	ND	ND	ND	<2	<2	<2	<2
B-10	ND	ND	0.8	ND	0.1	ND	<2	<2	<2	170
OS-10	ND	ND	ND	2.2	0.2	ND	<2	<2	<2	<2
B-11	ND	ND	ND	ND	0.1	ND	8,000 (2,300)	2,400 (800)	2,400 (800)	240 (80)
OS-11	ND	ND	ND	ND	ND	ND	<2 (<2)	<2 (<2)	<2 (<2)	30 (<2)

1. Not Detected. See Laboratory Report for detection limit.
2. P-6 Total Coliform result initially reported as 30, however correct result is 23. Laboratory to re-issue report (Silliker Laboratories pers. com.)
3. Not Sampled
4. CRWQCB split sample results shown in brackets

T2 CONT.

Adapted from URS Greine Woodward Clyde, 1999

LABORATORY RESULTS OF SEDIMENT SAMPLES COLLECTED SEPTEMBER 2, 1999

	OF-1[1]	OF-2	OF-3
Ammonia-N (mg/kg)	14	62	59
TKN (mg/kg)	154	784	504
Nitrate-N (mg/kg)	0.6	ND[2]	ND
Nitrite-N (mg/kg)	0.66	ND	ND
BOD (mg/kg)	11	2020	1050
MBAS (mg/kg)	ND	1.9	1.4
Coliforms (MPN Coliforms/g)	<3	230	930
Fecal Coliforms (MPN Fecal Coliforms/g)	<3	23	15

Notes: (1) Sample sites OF-1, OF-2, & OF-3 are at the same location as SD-1, SD-2, & SD-3
(2) Not Detected. See laboratory report for detection limit

T2 CONT.

Adapted from URS Grein

Divider C

Impaired Waterbodies in the Malibu Creek Watershed

303(d) Listed for Coliform & Nutrients

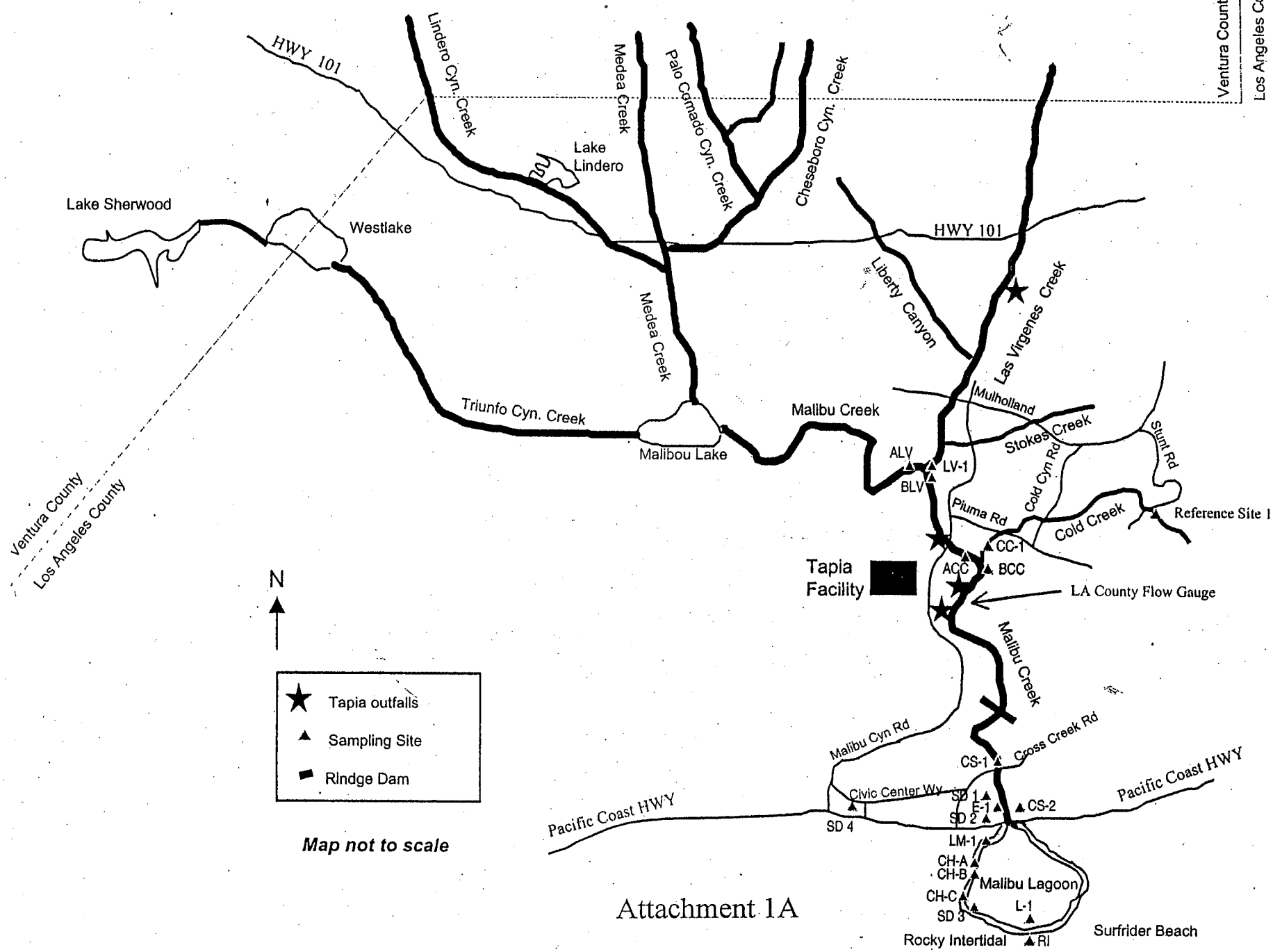

Attachment 1A

WQCB-LA
he Lower Malibu Creek Watershed's Sampling Sites

te Name	ID	Location	Approximate Altitude, ft
3V LAS VIRGENES CK	ALV	Malibu Ck. just upstream of confluence w/ Las Virgenes Ck	510
3V COLD CK	ACC	Malibu Ck. just upstream of confluence with Cold Creek	480
. COLD CK	BCC	Malibu Ck. just downstream of confluence with Cold Ck	480
. LAS VIRGENES CK	BLV	Malibu Ck. just downstream of confluence with Las Virgenes Ck	500
)LD CK	CC-1	Cold Ck. just upstream of confluence with Malibu Ck	480
GOON "A" CHANNEL	CH-A	North Malibu Lagoon, west side	0
GOON "B" CHANNEL	CH-B	Middle Malibu Lagoon, west side	0
GOON "C" CHANNEL	CH-C	South Malibu Lagoon, west side	0
GOON BREACH	LB	Distal end of Malibu Lagoon; location varies with each breach	0
GOON MAIN BODY	LM-1	Malibu Lagoon, west side, just south of Pacific Coast Highway	0
GOON SOUTH	L-1	Distal end of Malibu Lagoon, when not breached	0
S VIRGENES CK	LV-1	Las Virgenes Ck. just upstream of confluence with Malibu Ck	500
AZA/ESTUARY	E-1	Malibu Estuary, west side, just above Pacific Coast Highway Bridge and SD-2	0
FERENCE SITE-1	R-1	Cold Ck. upstream of Stunt Road	1300
)CKY INTERTIDAL	RI	Pacific Ocean surf at Malibu Beach, east of lifeguard station	0
RRA RETREAT/CROSS CK	CS-1	Malibu Ck. at Cross Creek Road	20
RRA RETREAT	CS-2	Malibu Estuary, east side, just above Pacific Coast Highway Bridge	20
ORM DRAIN-CIVIC CENTER	SD-1	North end of commercial plaza, just south of city yard	0
ORM DRAIN-COMMERCIAL	SD-2	Drains from west into Malibu Estuary, just north of Pacific Coast Highway, below E-1	0
ORM DRAIN-COLONY	SD-3	Drains from west into Malibu Lagoon, known as "Mystery Drain"	0
ORM DRAIN-WINTER CYN	SD-4	Across from Malibu Water Pollution Control Plant, south side of Civic Center Way	100

te Name	Location
ɔS-1	Straight out from public restroom
ɔS-2	Straight out from left fence line of Ahmanson house
ɔS-3	Driftwood in lagoon aligns with center pier of PCH pier
ɔS-4	At deck lihe of first house west of lagoon
ɔS-5	Straight out from Star Pines
ɔS-6	Straight out from House of the Rising Sun
ɔS-7	Straight outs from house with green trim and blues canvas awning; planes of glass at edge of deck; just before house with riprap at base
ɔS-8	Cape Cod gray house with green trim; rusty bolts on seawall; 2 houses east of Tudor-style house
ɔS-9	Small recessed house with red brick chimney between yellow modern-style house and light olive colored wood house
ɔS-10	Small red-roofed house right of large white modern-style house
ɔS-11	At west end of beach in front of small yellow house, next to storm drain outlet beneath large gray house
	Located southeast of the intersection of Cross Creek Road and Civic Center Way
:	Located in the Malibu Creek Preservation Company parking lot north of PCH
;	Located in south of the Malibu Creek Preservation Company parking and stormdrain 2, but north of PCH
'	Located on the south side of PCH, in the parking lot by Malibu Lagoon.
)	Located in the Malibu Creek Preservation Company parking lot north of PCH
	On the lagoon side of the homes lining the north side of Malibu Colony Drive, approximately 350' before the east end of road
!	On the lagoon side of the homes lining the north side of Malibu Colony Drive, approximately 250' before the east end of road

Attachment B-2

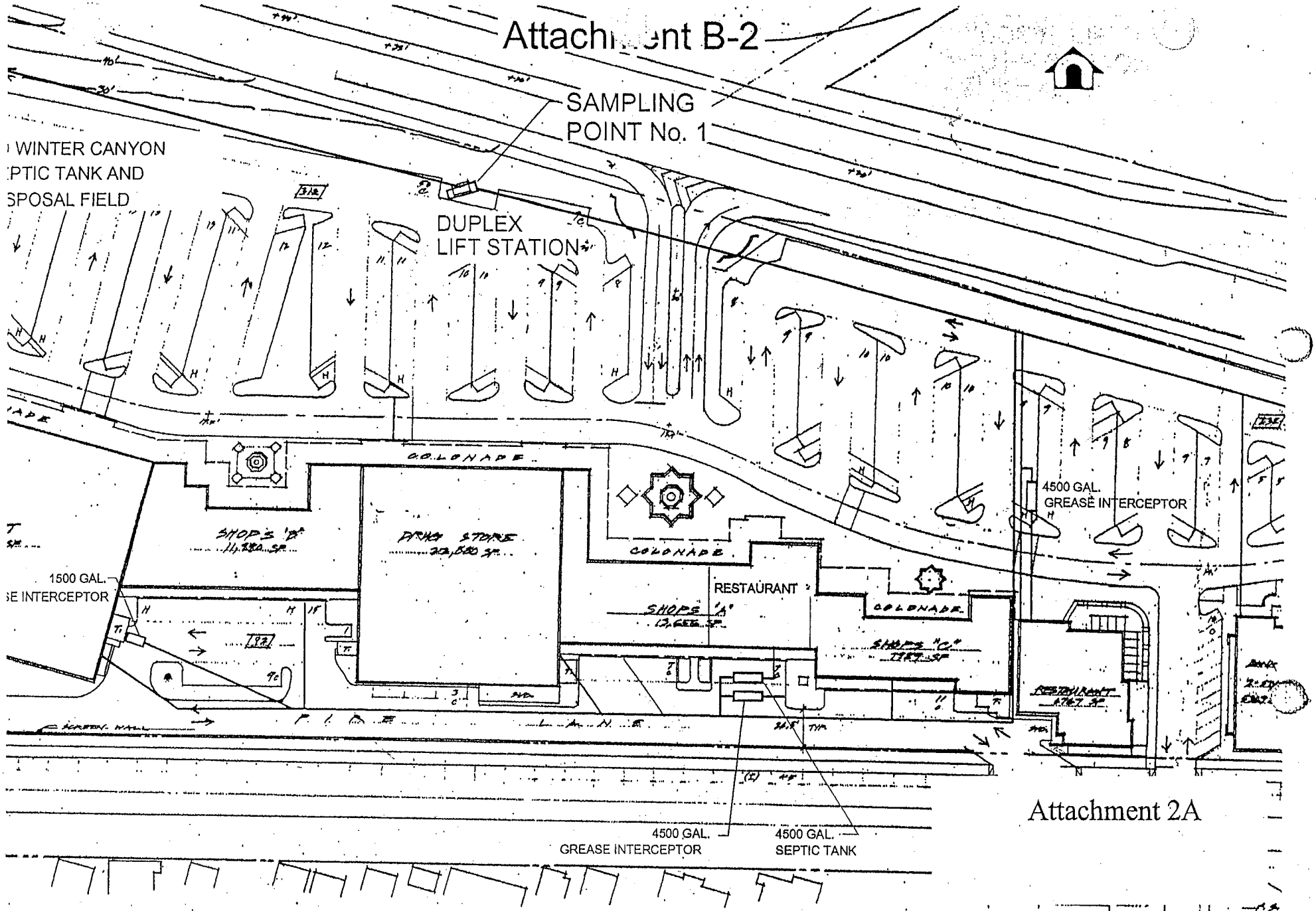

Attachment 2A

LLECTION LINES ARE IN APPROXIMATE LOCATIONS.

MALIBU COLONY PLAZA
WATER TREAMENT SYSTEMS
SITE PLAN

Attachment B-3

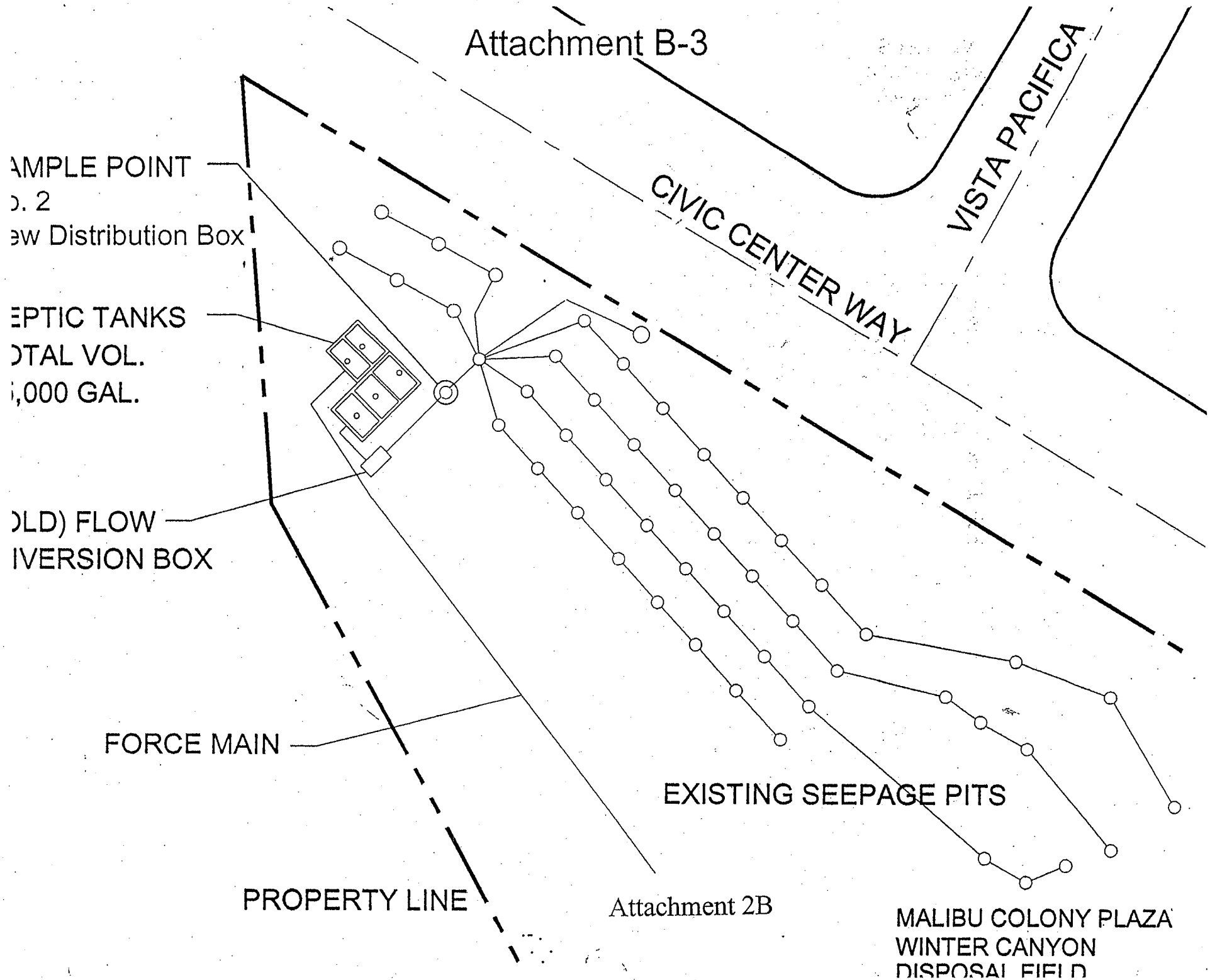

Attachment 2B

California Regional Water Quality Control Board
Los Angeles Region

Winston H. Hickox
Secretary for Environmental Protection

320 W. 4th Street, Suite 200, Los Angeles, California 90013
Phone (213) 576-6600 FAX (213) 576-6640
Internet Address: http://www.swrcb.ca.gov/~rwqcb4

Gray Davis
Governor

April 10, 2000

Ms. Kari Kramer
Malibu Bay Company
23705 W. Malibu Road, Suite D-2
Malibu, CA 90265

CERTIFIED MAIL
RETURN RECEIPT REQUESTED
CLAIM NO. Z 415-467-597

Dear Ms Kramer:

NOTICE OF VIOLATION: DISCHARGE OF VOLATILE ORGANIC CHEMICALS TO GROUNDWATER, AND DISCHARGE OF SEWAGE TO THE GROUND SURFACE, MALIBU COLONY PLAZA SEPTIC SYSTEM

You are hereby given notice that Malibu Bay Company is discharging wastewater to the groundwater in violation of Los Angeles Regional Water Quality Control Board *Basin Plan* objectives *and* in excess of state and federal maximum contaminant levels.

BACKGROUND

The Regional Board is in the process of issuing Waste Discharge Requirements to commercial facilities in the City of Malibu that discharge wastewater to the groundwater. In October 1999, the Regional Board required Malibu Bay Company to obtain Waste Discharge Requirements. As part of this process, in December 1999, Malibu Bay Company provided a Report of Waste Discharge to our office. On February 18, 2000, Mr. Rick Vergets of the Regional Board's staff and your consultant sampled Malibu Bay Company's septic tank on the north side of the Malibu Colony Plaza parking lot, and the distribution box on the south side of Civic Center Way north of Pacific Coast Highway. This sampling was conducted to characterize Malibu Bay Company's wastewater discharges. Volatile Organic Compounds were detected in Malibu Bay Company's discharge. Discharge of volatile organic compounds to groundwater is a violation of the Los Angeles Regional Water Quality Control Board's, *Basin Plan* objectives.

Attachment 2C

The following table shows the locations and concentrations of the volatile organic compounds detected in Malibu Bay Company's sewage discharge.

Chemical	Septic Tank	Distribution Box
Chloroform	10 µg/L	< 1µg/L
Bromodichloromethane	5 µg/L	< 1 µg/L
Toluene	5 µg/L	81 µg/L
Tetrachloroethene (PCE)	42 µg/L	161µg/L
Dibromochloromethane	5 µg/L	<1 µg/L
1,3, Dichlorobenzene	15 µg/L	12 µg/L
Trichloroethene (TCE)	<1 µg/L	386 µg/L

12-54

Malibu Bay Company's septic system discharge is tributary to groundwater in the Malibu Valley. The Basin Plan designates several beneficial uses for groundwater in the Malibu Valley area, including potential municipal and industrial use, and existing agricultural use. The state and federal maximum contaminant level for TCE and PCE is 5 µg/L, so the discharge from the Malibu Bay Company is one to two orders of magnitude higher than this standard and higher than the Basin Plan objectives. In order to meet Basin Plan objectives, you are hereby directed to cease discharging volatile organic compounds to the groundwater. The options for continued operation of your facility are to:

1. Obtain waste discharge requirements from the Regional Board (this is currently what Malibu Bay Company is doing).
2. Apply for and receive a National Pollutant Discharge Elimination System (NPDES) permit from this Board (per section 13260 and 13263 of the Porter-Cologne Water Quality Control Act),
3. Discharge the wastewater to a sanitary sewer system. There are no sanitary sewers nearby at this time; however, Malibu Bay Company, other dischargers, and the City of Malibu may wish to pursue this option.

On February 18, 2000, Regional Board staff also observed that Malibu Bay Company was discharging sewage to the ground surface. Judging from soil staining, soil erosion, and the condition of the distribution box, it appeared to Regional Board staff that the discharge had been ongoing for some time. Refer to the enclosed photograph. Upon a closer inspection of the distribution box, it was found to be corroded; concrete on the inside of the box has been eaten away by acids formed by hydrogen sulfide in the sewage. The red arrow denotes the sewage leak.

Pursuant to Section 13385 of the California Water Code, failure to stop discharging wastes in violation of the *Basin Plan* objectives may result in enforcement action(s) by this Regional Board, including Administrative Civil Liability penalties of up to $10,000 per day for each violation. Furthermore, the Administrative Civil Liability penalties may be assessed beginning with the February 18, 2000, inspection, and for any period of time that the violations previously existed.

If you have any questions, please contact Mr. Hugh Marley at (213) 576-6687 or Mr. Rick Vergets at (213) 576-6688.

Sincerely,

Dennis A. Dickerson
Executive Officer

cc: Jorge Leon, Office of Chief Counsel, State Water Resources Control Board
Steve Braband, BioSolutions, Inc.
Vic Peterson, City of Malibu

12-56

Attachment B-2

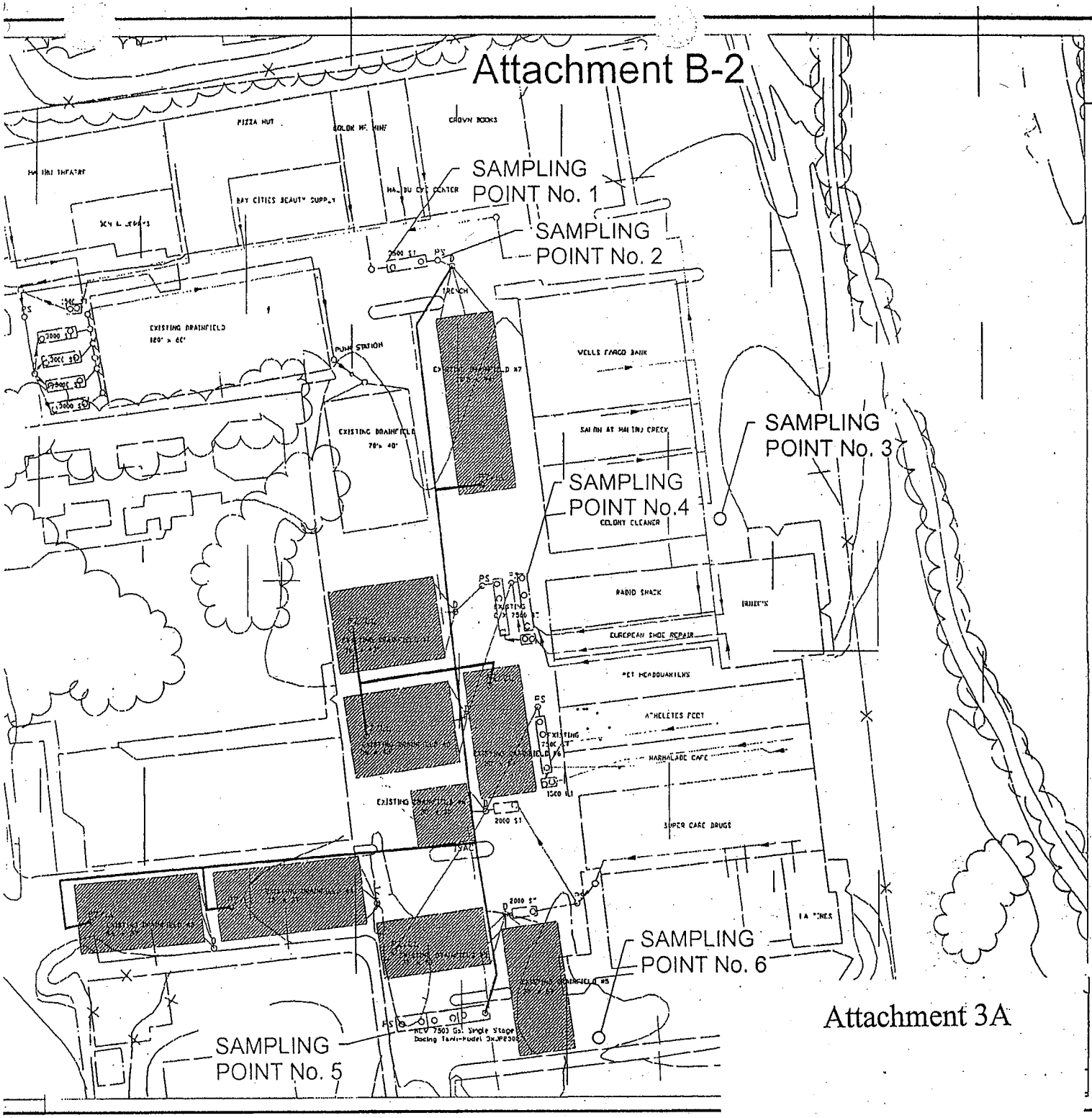

Attachment 3A

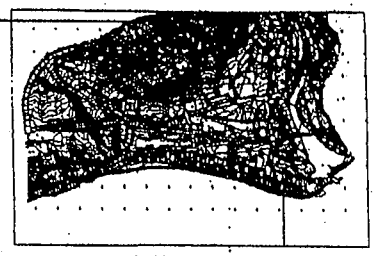

KEYPLAN

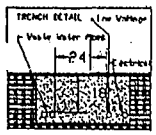

NOTES:

REPAIRS TO EXISTING WASTE TREATMENT SYSTEM:

INSTALL A 7500 GALLON DOSING TANK AS NOTED ON THE DRAWING. THIS SHOULD BE A JENSEN 3XJP2500 OR EQUIVALANT. A LIQUID LEVEL SENSOR AND OSI DUPLEX 55 SUBMERSIBLE PUMP SYSTEM SHOULD BE INSTALLED IN THE TANK.

ALSO INSTALL PIEZOMETERS AND LIQUID LEVEL SENSORS IN THE DRAINFIELDS AS NOTED ON THE DRAWING.

AN ISAC WASTE WATER MANAGEMENT SYSTEM MODEL PCM 1611 WILL BE INSTALLED WHERE NOTED AND A DOSING VALVE BOX ADJACENT TO IT.

THREE ZABEL A500HIP FILTERS SHOULD BE INSTALLED IN THE THREE EXISTING 7500 GALLON TANKS.

DOSING LINES AND LINE AND LOW VOLTAGE CONTROL WIRING SHOULD BE INSTALLED IN THE TRENCH SHOWN, ACCORDING TO THE ABOVE TRENCH DETAIL.

BioSolutions, Inc

California Regional Water Quality Control Board
Los Angeles Region

Winston H. Hickox
Secretary for Environmental Protection

320 W. 4th Street, Suite 200, Los Angeles, California 90013
Phone (213) 576-6600 FAX (213) 576-6640
Internet Address: http://www.swrcb.ca.gov/~rwqcb4

Gray Davis
Governor

April 10, 2000

Ms. Cindy McAfee
Malibu Creek Preservation Co., LLC
1101 Montana Ave. Suite A
Santa Monica, CA 90403

CERTIFIED MAIL
RETURN RECEIPT REQUESTED
CLAIM NO. Z 415-467-598

Dear Ms McAfee:

NOTICE OF VIOLATION: DISCHARGE OF VOLATILE ORGANIC CHEMICALS TO GROUNDWATER, MALIBU CREEK PLAZA SHOPPING CENTER

You are hereby given notice that Malibu Creek Preservation Co. LLC is discharging wastewater to the groundwater in violation of the Los Angeles Regional Water Quality Control Board's *Basin Plan* objectives *and* in excess of state and federal maximum contaminant levels.

BACKGROUND

The Regional Board is in the process of issuing Waste Discharge Requirements to commercial facilities in the City of Malibu that discharge wastewater to the groundwater. In August 1999, the Regional Board required Malibu Creek Preservation Co. LLC to obtain Waste Discharge Requirements. As part of this process, in December 1999, Malibu Creek Preservation Co. LLC provided a Report of Waste Discharge to our office. On February 18, 2000, Mr. Rick Vergets of the Regional Board's staff and your consultant sampled three of Malibu Creek Preservation Co. LLC's septic tanks. This sampling was conducted to characterize Malibu Creek Preservation Co. LLC's wastewater discharges. Volatile Organic Compounds were detected in Malibu Creek Preservation Co.LLC's discharge. Discharge of volatile organic compounds to groundwater is a violation of the Los Angeles Regional Water Quality Control Board's, *Basin Plan* objectives.

Attachment 3B

The following table shows the locations and concentrations of the volatile organic compounds detected in Malibu Creek Preservation Co.LLC's sewage discharge.

Chemical	CC1	CC2	CC4	CC5
Chloroform	3 µg/L	3 µg/L	3 µg/L	9 µg/L
Toluene	<1 µg/L	<1 µg/L	4 µg/L	44 µg/L
Tetrachloroethene (PCE)	17 µg/L	17 µg/L	<1µg/L	<1 µg/L
Trichloroethene (TCE)	67 µg/L	70 µg/L	7 µg/L	<1µg/L

Note: CC1 and CC2 are from the septic tank south of Banana Republic, CC4 is from the septic tank west of Marmalade Café, CC5 is southwest of the Wherehouse.

12-58

Malibu Creek Preservation Co., LLC's septic systems discharge to groundwater in the Malibu Valley adjacent to the Malibu Creek. The Basin Plan designates several potential beneficial uses for groundwater in the Malibu Valley, including potential municipal and industrial use, and existing agricultural use. The state and federal maximum contaminant level for TCE and PCE is 5 µg/L, so the discharge from the Malibu Creek Preservation Co. LLC is one order of magnitude higher than this standard and higher than the Basin Plan objectives. In order to meet Basin Plan objectives, you are hereby directed to cease discharging volatile organic compounds to the groundwater. The options for continued operation of your facility are to:

1. Obtain waste discharge requirements from the Regional Board (this is currently what Malibu Creek Preservation Co. LLC is doing).
2. Apply for and receive a National Pollutant Discharge Elimination System (NPDES) permit from this Board (per section 13260 and 13263 of the Porter-Cologne Water Quality Control Act),
3. Discharge the wastewater to a sanitary sewer system. There are no sanitary sewers nearby at this time; however, Malibu Creek Preservation Co. LLC, other dischargers, and the City of Malibu may wish to pursue this option.

Pursuant to Section 13385 of the California Water Code, failure to stop discharging wastes in violation of *Basin Plan* objectives may result in enforcement action(s) by this Regional Board, including Administrative Civil Liability penalties of up to $10,000 per day for each violation. Furthermore, the Administrative Civil Liability penalties may be assessed beginning with the February 18, 2000, inspection, and for any period of time that the violations previously existed.

If you have any questions, please contact Mr. Hugh Marley at (213) 576-6687 or Mr. Rick Vergets at (213) 576-6688.

Sincerely,

Dennis A. Dickerson
Executive Officer

cc: Jorge Leon, Office of Chief Counsel, State Water Resources Control Board
Steve Braband, BioSolutions, Inc.
Vic Peterson, City of Malibu

12-59

EXISTING SEPTIC SYSTEM FOR 3835 Cross Creek Road

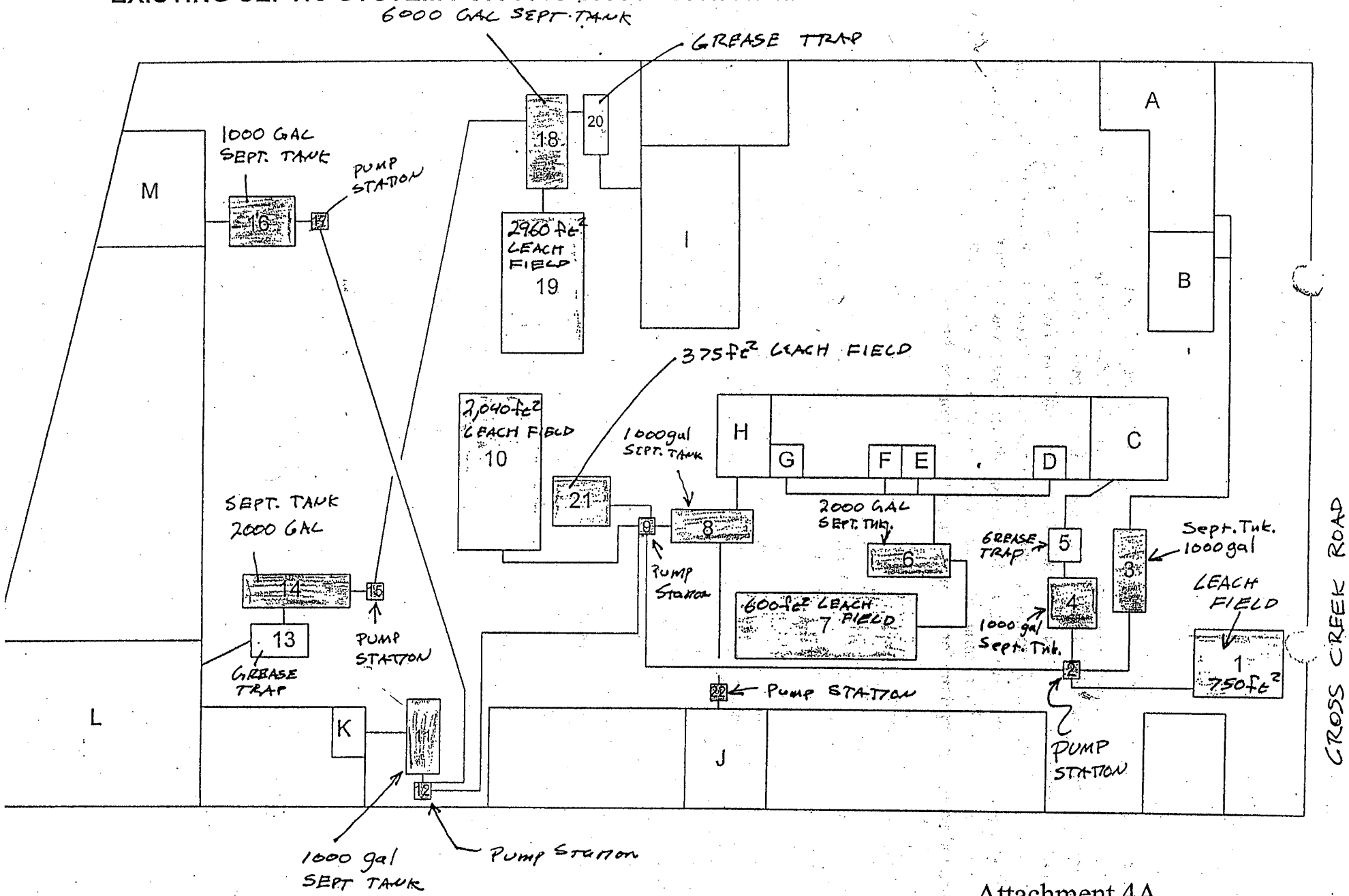

Attachment 4A

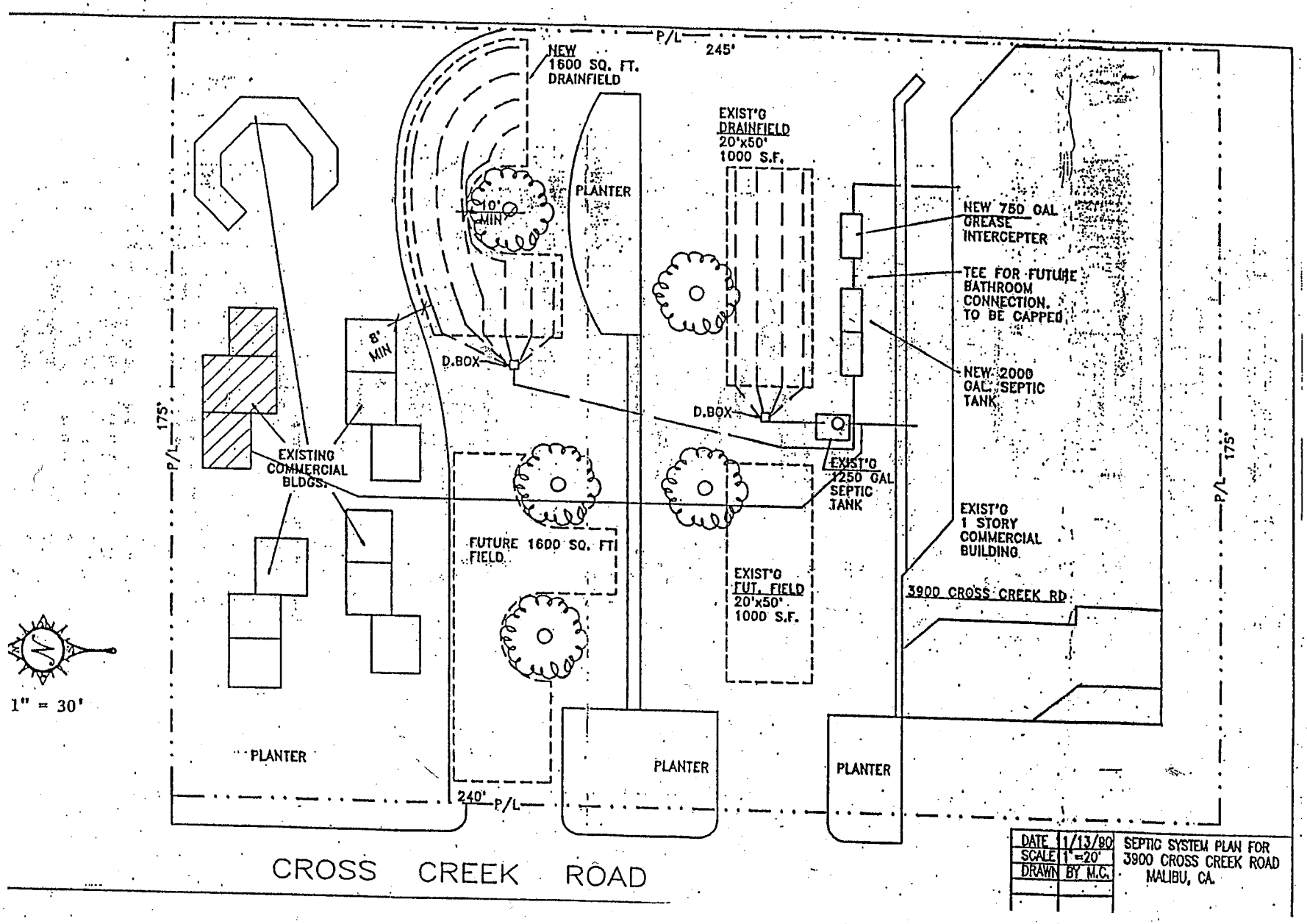

Attachment 4B

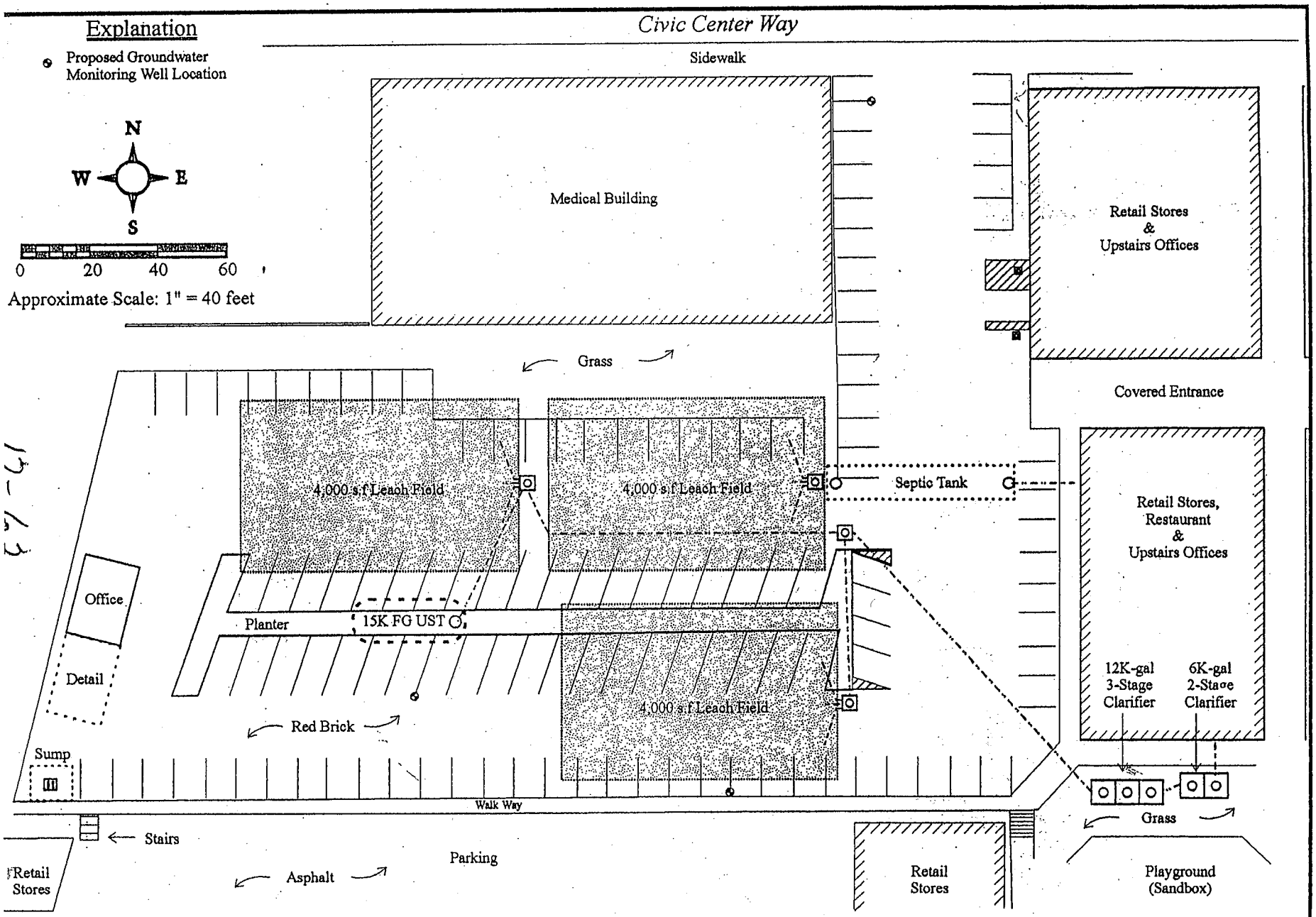

Daly Environmental Services

SITE MAP

Malibu Cross Creek, LTD.

23410 Civic Center Way
Malibu, CA

Attachment 4C

19-23

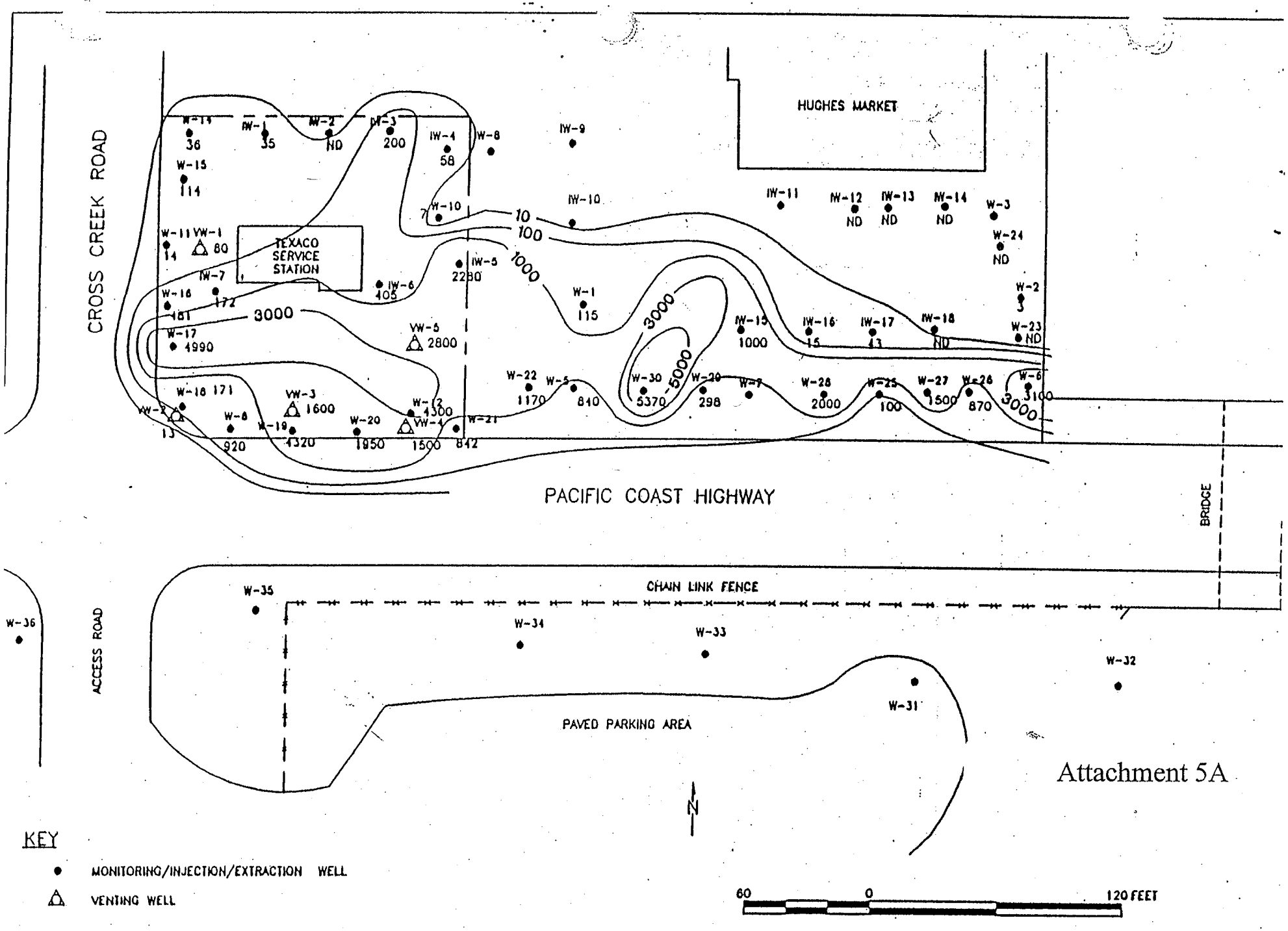

Attachment 5A

KEY

● MONITORING/INJECTION/EXTRACTION WELL

△ VENTING WELL

irwin	TITLE TEXACO REFINING & MARKETING INC. HIGHEST TPH CONCENTRATIONS IN SOIL PRIOR TO REMEDIATION 23387 PCH MALIBU, CALIFORNIA	FIGURE 2

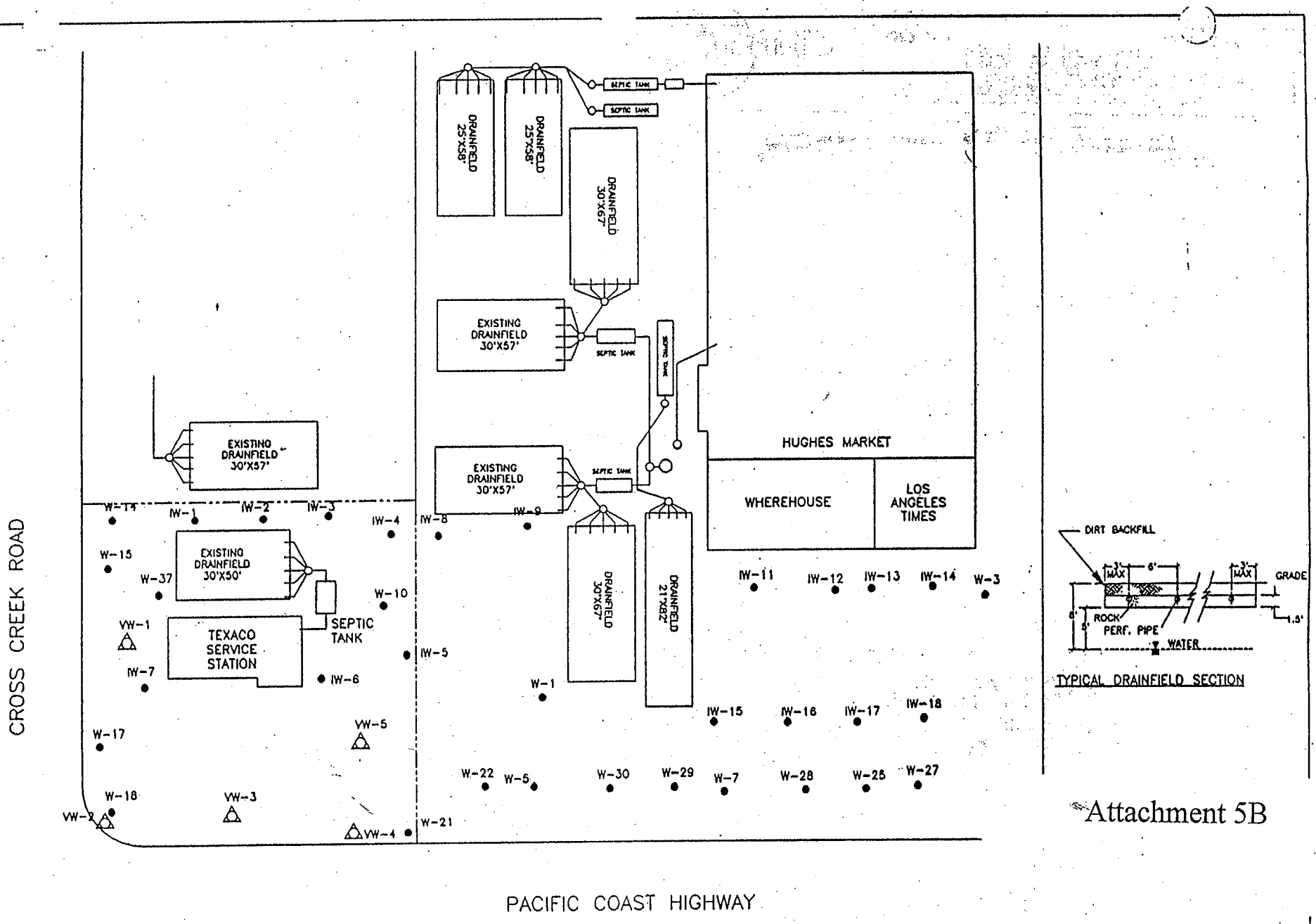

Attachment 5B

KEY

- ● MONITORING/INJECTION/EXTRACTION WELL
- △ VENTING WELL

irwin	TITLE TEXACO REFINING & MARKETING INC. SITE PLAN WITH SEPTIC SYSTEMS 23387 PCH MALIBU, CALIFORNIA	FIGURE 2
	DATE / PROJECT NUMBER / DWN / APPROVED	

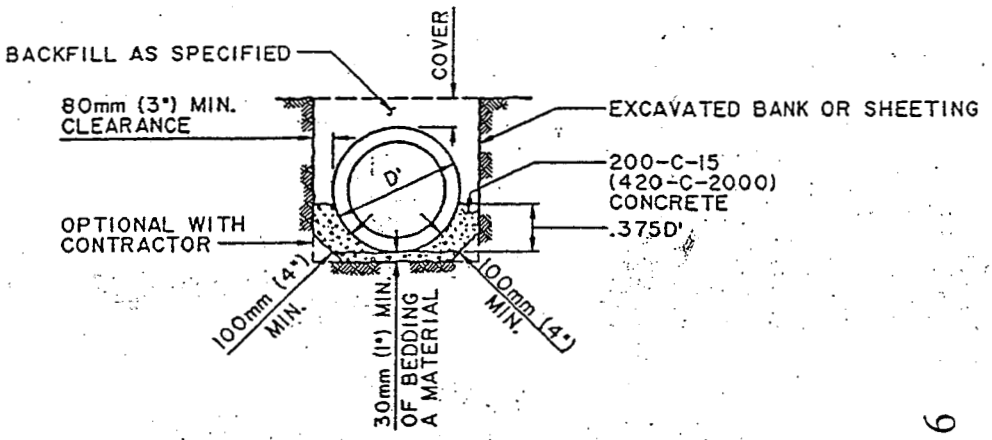

CASE 1

Attachment 6

NOTE:

CASE 1 BEDDING (LOAD FACTOR 2.1)

SHALL BE USED WHERE SPECIFIED ON PROJECT DRAWINGS OR WHERE REQUIRED AS AN ALTERNATIVE TO CASE 2 OR CASE 3 BEDDING AS PROVIDED HEREON AND ON SH. 2. CASE 4 BEDDING SHALL BE USED INSTEAD OF CASE 1 AGAINST SHEETING OR UNSTABLE TRENCH SIDES IF SO REQUIRED BY THE ENGINEER.

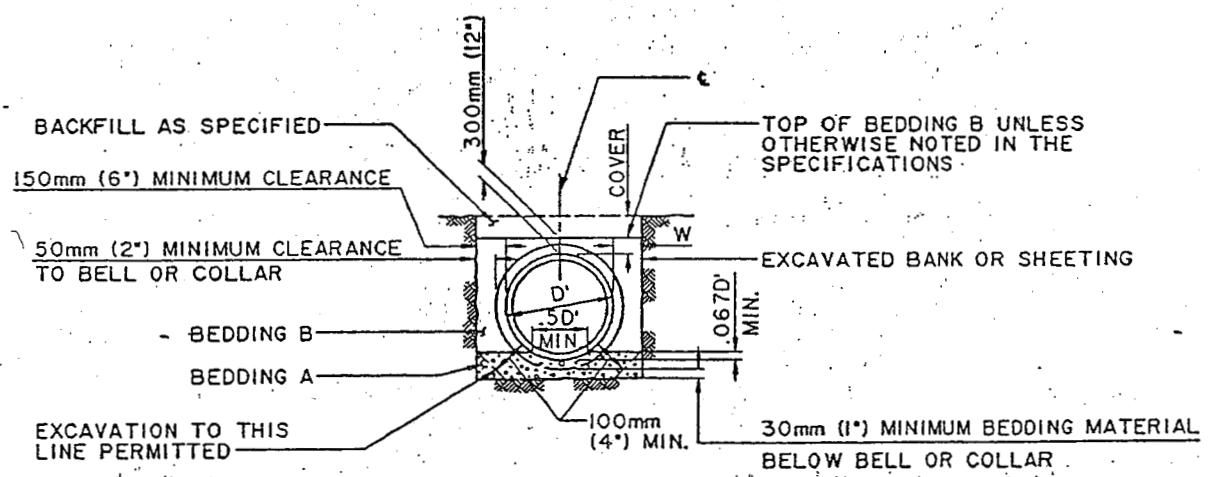

CASE 2

VITRIFIED CLAY AND PLAIN CONCRETE PIPE

NOTES:

CASE 2 BEDDING & BACKFILL AROUND PIPE (LOAD FACTOR 1.8)

(a) W AT SPRING LINE SHALL NOT BE LESS THAN 150mm (6") FOR ANY DEPTH OF TRENCH. THIS DIMENSION MAY INCLUDE THE THICKNESS OF ANY SHEETING.

(b) WHERE COVER IS 2.5m (8'-0") OR LESS, W MEASURED AT TOP OF PIPE MAY BE ANY DIMENSION GREATER THAN 150mm (6").

(c) WHERE COVER IS GREATER THAN 2.5m (8'-0"), W MEASURED AT TOP OF PIPE SHALL NOT BE GREATER THAN 200mm (8") UNLESS THE CONTRACTOR AT HIS OWN EXPENSE PROVIDES CASE 1 BEDDING OR STRONGER PIPE. THE STATED 200mm (8") INCLUDES THE THICKNESS OF ANY SHEETING.

(d) SCREED BEDDING A TO FIT CURVATURE AND GRADE OF PIPE. TYPE OF SCREED AND THE METHOD OF USE TO BE APPROVED BY THE ENGINEER.

LOS ANGELES COUNTY DEPARTMENT OF PUBLIC WORKS

PIPE BEDDING IN TRENCHES

STANDARD PLAN METRIC

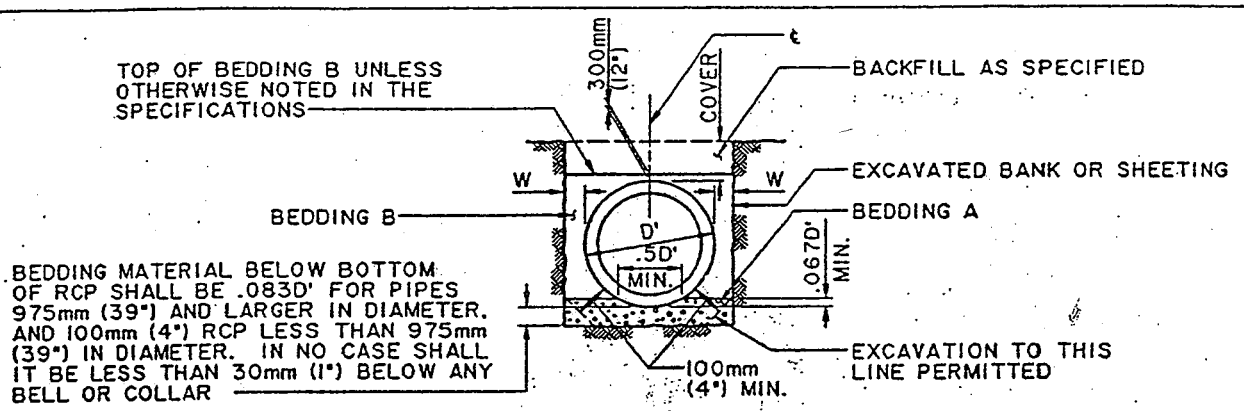

CASE 3
REINFORCED CONCRETE PIPE

NOTES:

CASE 3 BEDDING & BACKFILL AROUND RCP (LOAD FACTOR 1.8)

(a) W AT SPRING LINE SHALL NOT BE LESS THAN THE FOLLOWING: 150mm (6") FOR RCP 1500mm (60") OR LESS IN DIAMETER, 250mm (10") FOR RCP 1575mm (63") TO 2700mm (108") INCLUSIVE IN DIAMETER, AND 300mm (12") FOR PIPE LARGER THAN 2700mm (108") IN DIAMETER. THESE DIMENSIONS MAY INCLUDE THE THICKNESS OF ANY SHEETING.

(b) WHERE COVER IS 3m (10'-0") OR LESS, W MEASURED AT THE TOP OF THE RCP MAY BE ANY DIMENSION GREATER THAN THE ABOVE SPECIFIED MINIMUM, UNLESS OTHERWISE SPECIFIED ON THE PROJECT DRAWINGS.

(c) WHERE COVER IS GREATER THAN 3m (10'-0"), W MEASURED AT TOP OF PIPE SHALL NOT BE GREATER THAN 250mm (10") FOR RCP 2700mm (108") IN DIAMETER OR LESS, OR 300mm (12") FOR RCP OVER 2700mm (108") IN DIAMETER UNLESS THE CONTRACTOR AT HIS OWN EXPENSE PROVIDES CASE 1 BEDDING OR STRONGER RCP. THESE DIMENSIONS INCLUDE THE THICKNESS OF ANY SHEETING.

(d) SCREED BEDDING A TO FIT CURVATURE AND GRADE OF RCP. TYPE OF SCREED AND THE METHOD OF USE TO BE APPROVED BY THE ENGINEER.

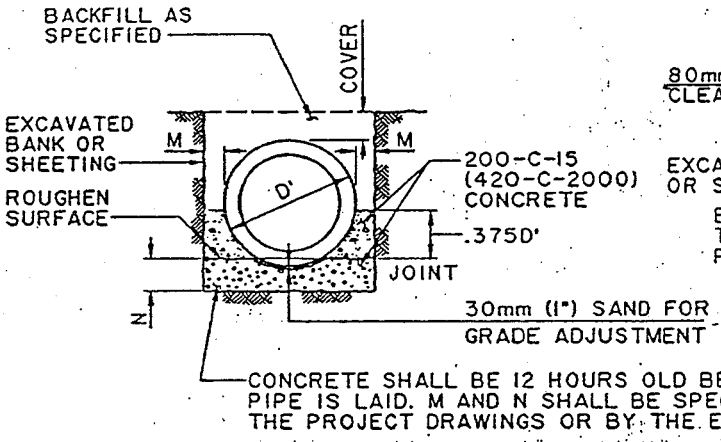

CASE 4

NOTE:

CASE 4 BEDDING (LOAD FACTOR 3.0)

WHERE REQUIRED BY THE ENGINEER AS AN ALTERNATIVE TO CASE 1 OR CASE 5 TO MEET CONDITIONS ARISING DURING CONSTRUCTION.

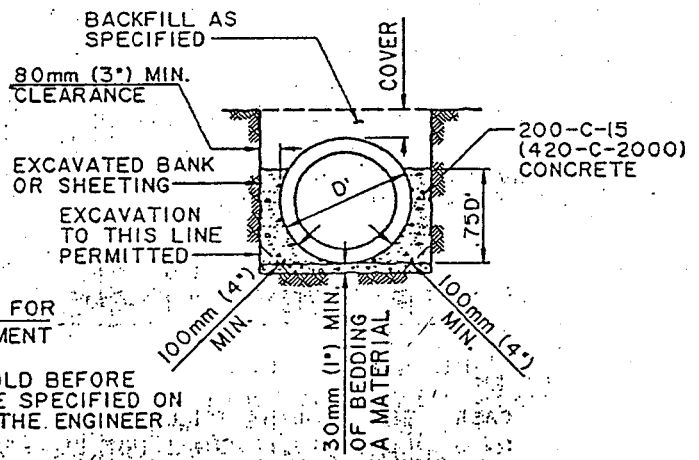

CASE 5

NOTE:

CASE 5 BEDDING (LOAD FACTOR 2.7)

SHALL BE USED WHERE SPECIFIED ON THE PROJECT DRAWINGS. CASE 4 BEDDING SHALL BE USED INSTEAD OF CASE 5 AGAINST SHEETING OR UNSTABLE TRENCH WALLS IF SO REQUIRED BY THE ENGINEER.

LOS ANGELES COUNTY DEPARTMENT OF PUBLIC WORKS

PIPE BEDDING IN TRENCHES

STANDARD PLAN METRIC 3080-2

12-66

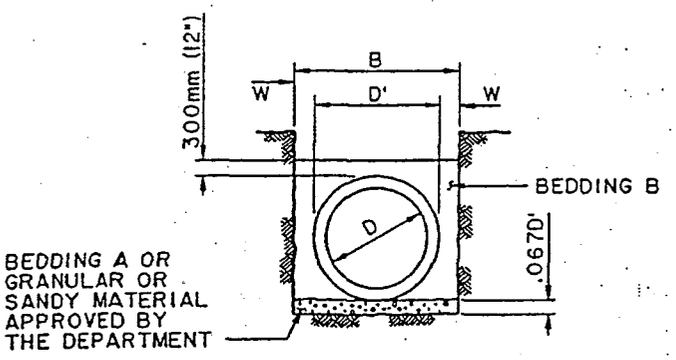

CASE 6

NOTES:

CASE 6 BEDDING (LOAD FACTOR 1.5)

(a)

(b) NOTES (a), (b), AND (c) FROM CASE 3 SHALL APPLY.

WHERE SUBGRADE IS COMPOSED OF OTHER THAN GRANULAR OR SANDY MATERIAL, THE TRENCH SHALL BE EXCAVATED TO A DEPTH OF AT LEAST 80mm (3") BELOW THE PIPE AND BACKFILLED WITH A BEDDING MATERIAL OR OTHER MATERIALS AS MAY BE SPECIFIED OR OTHERWISE APPROVED BY THE DEPARTMENT.

NOTES

1. USE CASE 3 FOR RCP, CASE 2 FOR VITRIFIED CLAY, PLASTIC AND PLAIN CONCRETE PIPE UNLESS OTHERWISE SPECIFIED OR SHOWN ON THE PROJECT DRAWINGS.
2. FOR RCP 675mm (27") IN DIAMETER AND LARGER, BEDDING A SHALL COMPOSED OF SAND, 20mm (3/4") OR 15mm (1/2") CRUSHED ROCK, 5mm (NO.3 OR 4) CONCRETE AGGREGATE OR GRAVEL OR OTHER GRANULAR MATERIAL AS SPECIFIED AND SHALL HAVE A SAND EQUIVALENT VALUE OF NOT LESS THAN 20 UNLESS OTHERWISE APPROVED BY THE ENGINEER.
3. WHERE RCP SMALLER THAN 675mm (27") IN DIAMETER IS USED, THE REQUIREMENTS IN NOTE 2 SHALL BE MET EXCEPT THAT A GRADATION COARSER THAN 4.75mm (NO.4) CONCRETE AGGREGATE OR NO COARSER THAN 15mm (1/2") CRUSHED ROCK SHALL BE USED.
4. BEDDING B SHALL BE COMPOSED OF SAND OR OTHER GRANULAR MATERIAL AND SHALL HAVE A SAND EQUIVALENT VALUE NOT LESS THAN 20 AS SPECIFIED IN SUBSECTION 306-1.2.1 AS AMENDED UNLESS OTHERWISE APPROVED BY THE ENGINEER AND SHALL BE COMPLETED PRIOR TO PLACING THE BALANCE OF THE BACKFILL. THE MAXIMUM ROCK SIZE FOR BEDDING B SHALL BE 100mm (4") IN THE GREATEST DIMENSION. NESTING OF ROCKS WILL NOT BE PERMITTED.
5. UNLESS SPECIFIED ON THE PROJECT DRAWINGS, CONCRETE SHALL BE 200-C-15 (420-C-2000).
6. CONCRETE BACKFILL SHALL BE POURED FROM WALL TO WALL OF THE TRENCH AND FROM THE BOTTOM OF THE TRENCH TO A MINIMUM DEPTH OF 100mm (4") OVER THE TOP OF THE PIPE.
7. CONCRETE BACKFILL SHALL BE PROVIDED FOR RCP 525mm (21") IN DIAMETER OR LESS WHERE THE COVER IS EQUAL TO OR LESS THAN 600mm (24"), FOR RCP GREATER THAN 525m (21") IN DIAMETER BUT LESS THAN 975mm (39") WHERE THE COVER IS LESS THAN 375mm (15") AND FOR RCP 975mm (39") OR GREATER WHERE THE COVER IS LESS THAN 300mm (12"). CONCRETE BACKFILL SHALL BE IN ACCORDANCE WITH NOTES 5 AND 6.
8. 3-EDGE BEARING TEST LOAD FACTOR = 1.0
9. DIMENSIONS SHOWN ON THIS PLAN FOR METRIC AND ENGLISH UNITS ARE NOT EXACT EQUAL VALUES. IF METRIC VALUES ARE USED, ALL VALUES USED FOR CONSTRUCTION SHALL BE METRIC VALUES. IF ENGLISH UNITS ARE USED, ALL VALUES USED FOR CONSTRUCTION SHALL BE ENGLISH UNITS.

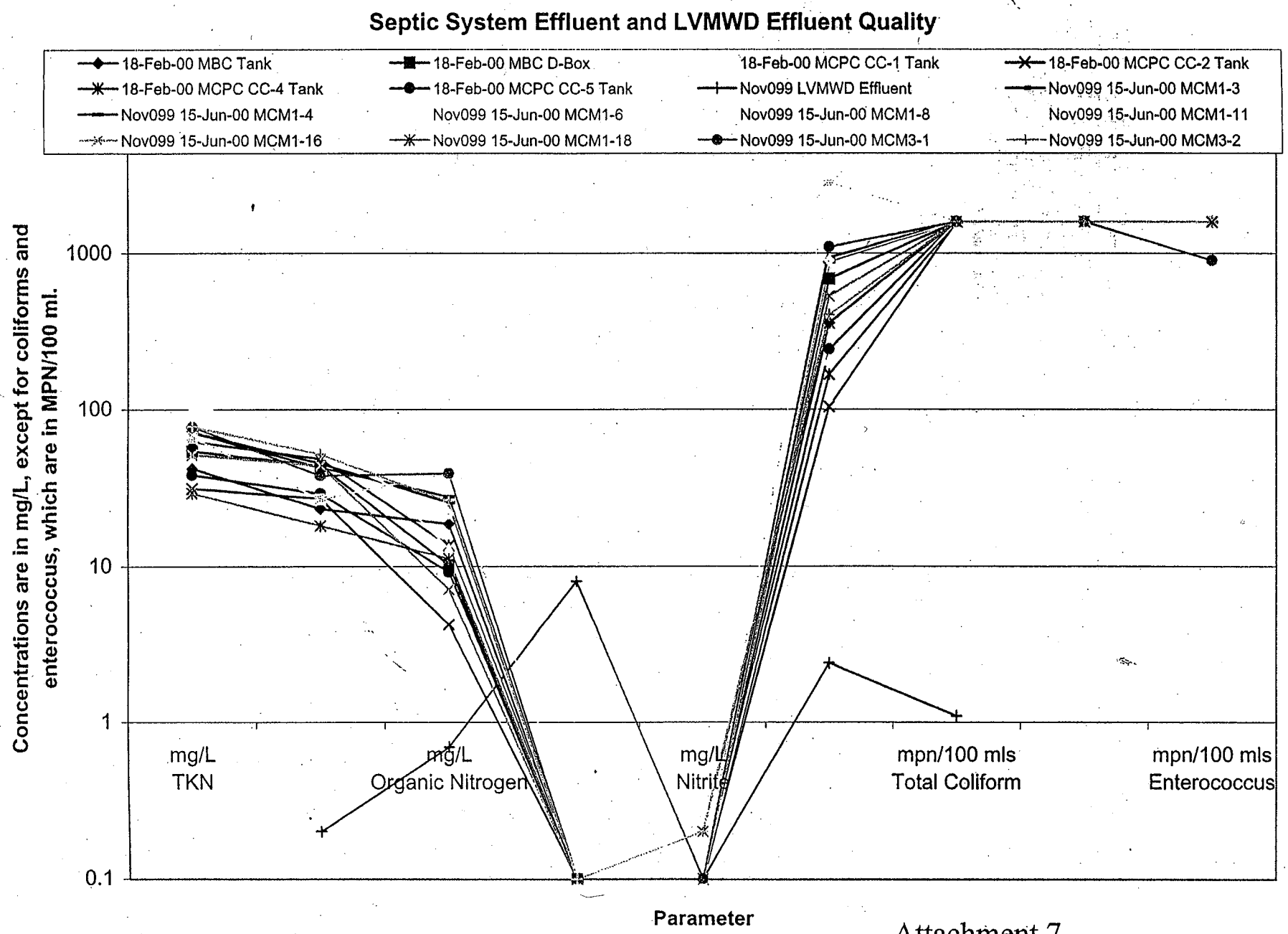

Attachment 7

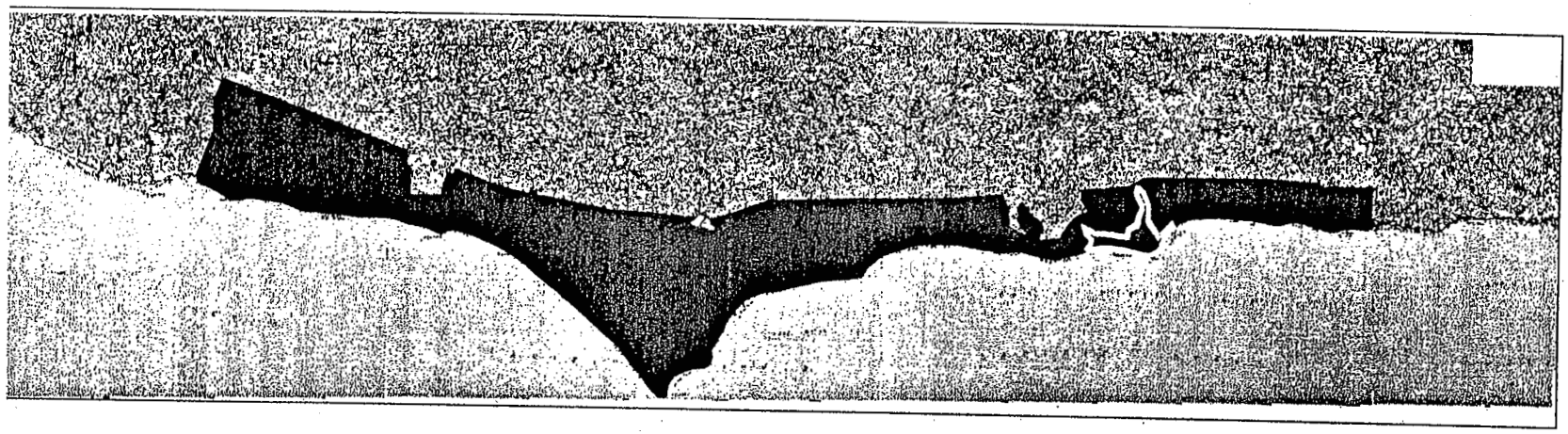

MTI
City Limits of Malibu

City of Malibu

Boundaries of study area

N
E
S

Los Angeles Regional Water Quality Control Board

8

16 Miles

12- 60

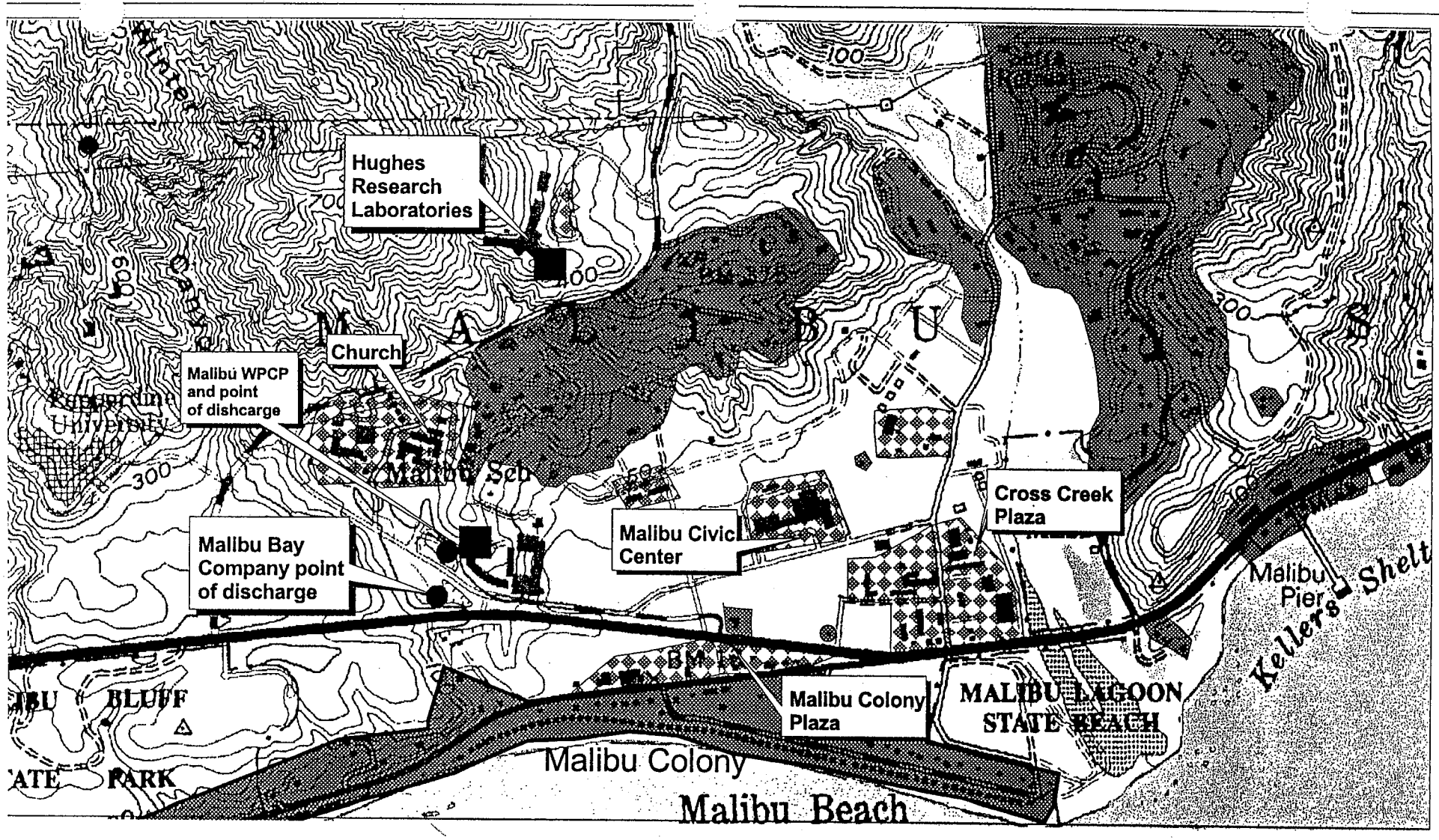

N
E
S

Predominantly individual on site systems (some commercial)

Commercial or cluster on site systems

Package Plant

0 0.5 Miles

Malibu Valley Area

Los Angeles Regional Water Quality Control Board

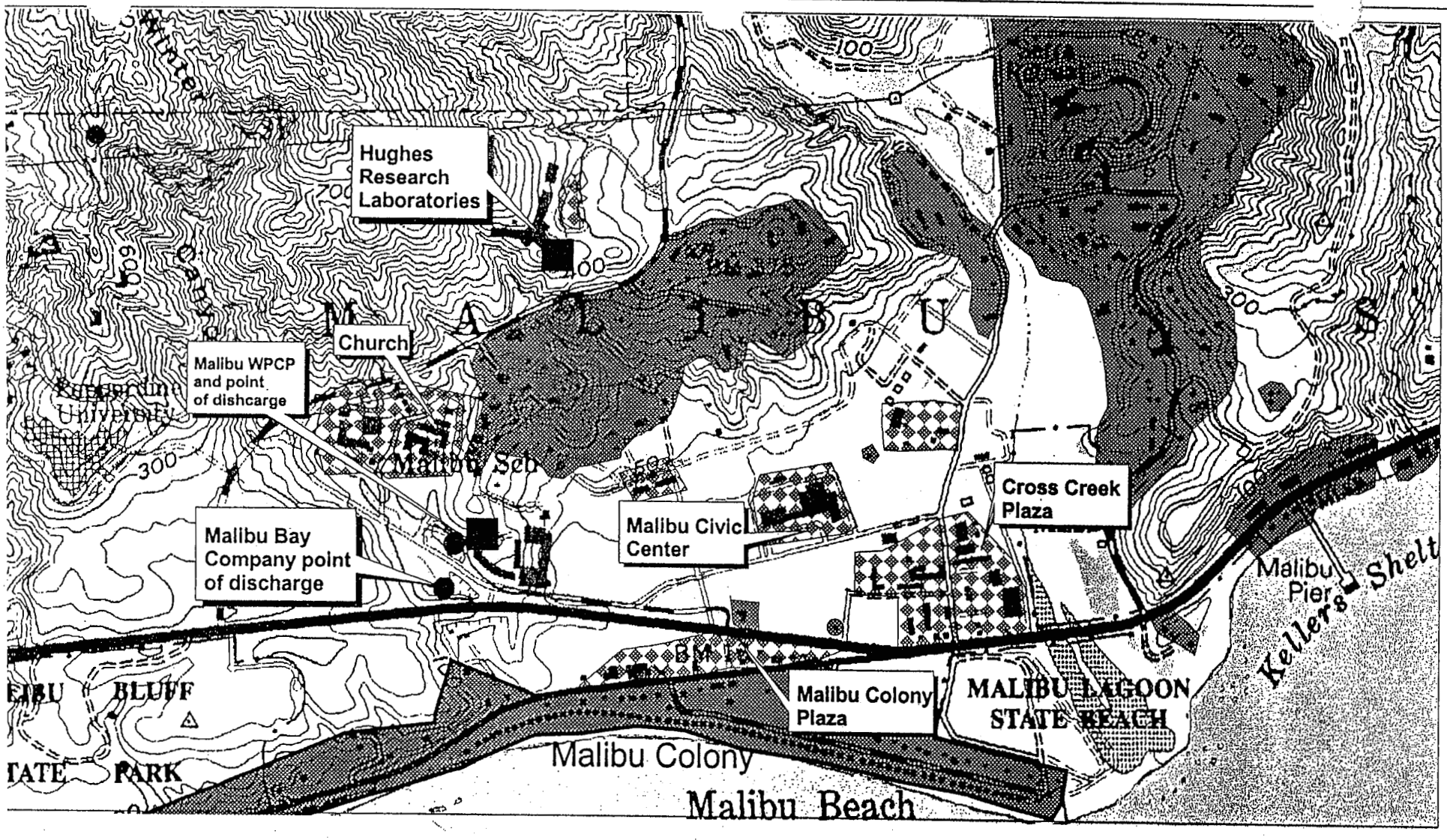

N
E
S

Predominantly individual on site systems (some commercial)

Commercial or cluster on site systems

Package Plant

0 0.5 Miles

Malibu Valley Area

Los Angeles Regional Water Quality Control Board

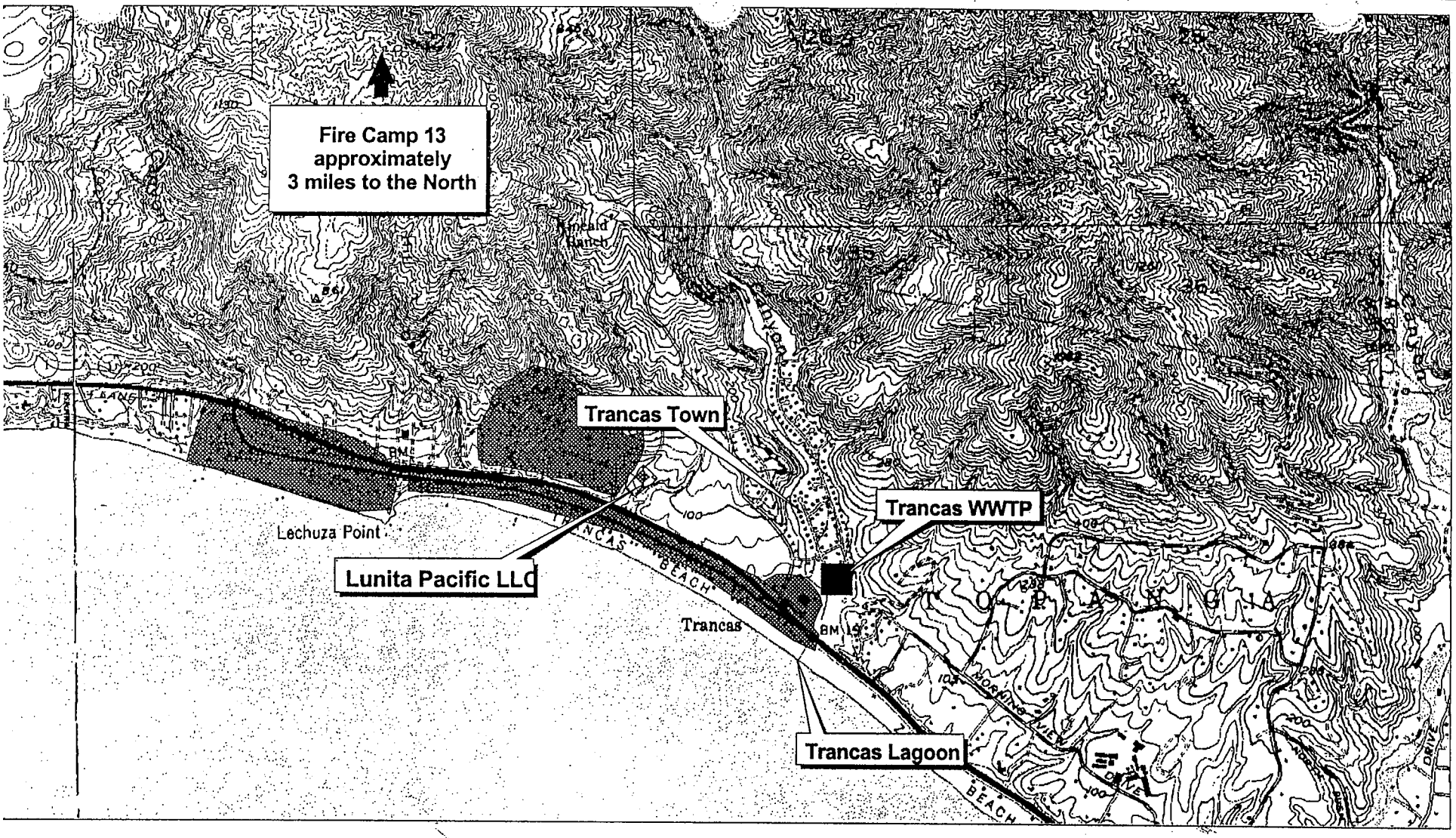

N
W E
S

■ Package Plant

Predominantly individual on site systems (some commercial)

Commercial or cluster on site systems

0 1 Miles

Trancas Canyon Area

Los Angeles Regional Water Quality Control Board